Operating Instructions

Barrier
MHTM™ MicroDrive
Toll and Toll HighSpeed

Doc-ID: 5815,0015US

Version: 02

MAGNETIC Automation Corporation
3160 Murrell Road
Rockledge, Florida, 32955
USA

Tel.: +1 321 635 8585
Fax: +1 321 635 9449
E-Mail: info@ac-magnetic.com
Internet: www.ac-magnetic.com

Important Safety Instructions

- Read and follow all instructions.
- Never let children operate or play with barrier controls. Keep the remote control (where provided) away from children.
- Personnel should keep away from a barrier arm in motion and keep the moving barrier arm in sight until it is completely closed or opened. No one should cross the path of a moving barrier arm.
- Test the barrier system monthly. After adjusting the force or the limit of travel, retest the barrier system. Failure to adjust and retest the barrier system properly can increase the risk of injury or death.
- Keep barrier properly maintained. Read the owner's manual. Have a qualified service person make repairs to barrier hardware.
- The barrier is for vehicles only. Pedestrians must use separate entrance.
- Save these instructions.

Contents

1 General ... 9
1.1 Information regarding the operating instructions ... 9
1.2 Pictogram explanation ... 10
1.3 Limitation of liability ... 11
1.4 Copyright protection ... 11
1.5 Scope of delivery ... 12
1.6 Warranty ... 12
1.7 Customer service ... 12
1.8 UL-Declaration ... 12
1.9 Environmental protection ... 13
2 Safety ... 14
2.1 Intended use of the barriers ... 14
2.1.1 Intended use for certain road vehicles ... 14
2.1.2 Non-Intended use ... 15
2.2 Operator's responsibility ... 16
2.3 Changes and modifications ... 16
2.4 Specialists and operating personnel ... 17
2.4.1 Requirements ... 17
2.5 Personal protective equipment ... 18
2.6 Occupational safety and special dangers ... 18
2.6.1 Danger symbols on the MHTM™ MicroDrive barrier ... 18
2.6.2 Hazard notes and occupational safety ... 19
2.7 Danger area ... 25
3 Identification ... 26
3.1 Type plate ... 26
3.2 Type code ... 27
4 Technical data ... 28
4.1 Toll and Toll HighSpeed ... 28
4.1.1 Dimensions and weight ... 28
4.1.2 Electrical connection ... 29
4.1.3 Operating conditions ... 29
4.1.4 Operating times ... 29
4.2 Control unit ... 30
4.3 Plug-in module "Detector A–B" ... 31
4.4 Plug-in module "Radio" ... 31
5 Design and function ... 32
5.1 Design ... 32
5.2 Function ... 33

Contents

6 Transport and storage ... 34

6.1 Safety ... 34

6.2 Transport inspection ... 35

6.3 Transport ... 36

6.4 Storage ... 36

7 Design notes for induction loops ... 37

8 Assembly and installation ... 40

8.1 Safety ... 40

8.2 Required steps ... 42

8.3 Foundation and empty conduits ... 43

8.3.1 Foundation and empty conduits for the barrier ... 44

8.3.2 Foundation and empty conduits for light barrier post ... 47

8.4 Assembly and installation of induction loops ... 49

8.4.1 Directions for the assembly and installation of induction loops ... 49

8.4.2 Induction loops ... 51

8.4.3 Testing induction loops ... 51

8.4.4 Installing induction loops in bitumen, asphalt, or concrete ... 51

8.4.5 Installing induction loops under interlocking stone paving ... 53

8.5 Unpacking ... 54

8.6 Opening barrier housing ... 54

8.7 Assemble housing ... 55

8.8 Assemble light barrier post ... 56

8.9 Assemble safety light barrier ... 57

8.9.1 Assemble transmitter ... 57

8.9.2 Assemble receiver ... 58

8.10 Assembling flange and barrier arm ... 59

8.11 Conversion "left version" – "right version" ... 61

8.12 Check and set the balancing springs in the lever system ... 64

8.12.1 Setting balancing springs ... 65

8.12.2 Overview table balancing springs ... 67

8.12.3 Equipment plan balancing springs ... 67

8.13 Align barrier housing and light barrier post ... 68

8.14 Installing warning signs ... 69

8.15 Check assembly and installation ... 69

Contents

9 Electrical connection 70

9.1 Safety 70

9.2 Installing electrical protective devices 73

9.3 Connecting the mains supply 73

9.4 Connect customer's control lines (signalling devices) 76

9.4.1 Connecting safety devices 77

9.4.2 Connecting safety loop 78

9.4.3 Connect and test the safety light barriers 79

9.4.4 Connecting emergency opening contacts 80

9.4.5 Digital inputs 81

9.4.6 Digital outputs and output relays 82

9.5 Checking the electrical connection 83

10 Start-up and operation 84

10.1 Safety 84

10.2 Commissioning 85

10.3 Switching on and off the barrier 86

10.4 Opening and closing the barrier manually 88

10.5 Putting the barrier temporarily out of operation 89

11 Cleaning and Maintenance 90

11.1 Safety 90

11.2 Cleaning 91

11.3 Cleaning from the outside 91

11.4 Clean barrier housing from the inside 91

11.5 Maintenance schedule 92

12 Malfunctions 94

12.1 Safety 94

12.2 Malfunction table – barrier malfunctions 95

12.3 Warning and interference messages on the display 99

12.3.1 Event, warning and error messages – Logic control (Control unit) 100

12.3.2 Event, warning and error messages – Motor GW 102

12.3.3 Event, warning and error messages – Detector 105

12.3.4 Event, warning and error messages – All modules 105

12.4 Reset the barrier 106

12.5 Closing or opening the barrier arm in case of power failure 107

12.6 Safety 109

12.7 Spare parts 110

12.8 Replacing the barrier arm 110

Contents

13 Decommissioning, disassembly and disposal 112

14 UL-Declaration 113

15 Grant of equipment authorization – Radio receiver module 115

16 Appendix 117

16.1 Wiring diagrams 117

16.1.1 Wiring diagrams Toll and Toll Pro 119

16.1.2 Wiring diagrams Toll HighSpeed 127

Index 139

1 General

1.1 Information regarding the operating instructions

These operating instructions provide crucial information on handling of MAGNETIC barriers MHTM™ MicroDrive. Pre-requisite for safe working is the observance of all specified safety notes and instructions.

In addition, the local accident prevention regulations valid at the barrier's area of application and general safety regulations have to be complied with.

Carefully read the operating instructions before starting any work! They are a product component and must be kept in direct proximity of the barrier, well accessible to the personnel at all times.

When passing the barrier on to third parties, the operating instructions must also be handed over.

Components from other suppliers may have their own safety regulations and instructions for use. These must also be observed.

Parameterisation of the barrier control unit MGC and MGC Pro

NOTE!

For parameterisation of the control units MGC and MGC Pro, see separate document "Description of control units MGC and MGC Pro for MHTM™ MicroDrive barriers (Doc-ID: 5816,0006)".

1.2 Pictogram explanation

Warning notes

Warning notes are characterised by pictograms in these operating instructions. The warning notes are followed by signal words expressing the scale of the hazard.

It is absolutely essential to observe the notes and to proceed with caution in order to prevent accidents as well as bodily injuries and property damage.

⚠ DANGER	
	The signal word DANGER points to an immediately dangerous situation, which leads to death or severe injuries if it is not avoided.

⚠ WARNING	
	The signal word WARNING points to a potentially dangerous situation, which can lead to death or severe injuries if it is not avoided.

⚠ CAUTION	
	The signal word CAUTION points to a potentially dangerous situation, which can lead to minor injuries if it is not avoided.

NOTICE	
	The signal word NOTICE points to a potentially harmful situation, which can lead to property damage if it is not avoided.

Hints and recommendations

NOTE!

…highlights useful hints and recommendations as well as information for an efficient and trouble-free operation.

1.3 Limitation of liability

All specifications and notes in these operating instructions were compiled with consideration to the valid standards and regulations, the state of the art as well as to our long-standing knowledge and experience.

The manufacturer is not liable for damages caused by:

- Non-observance of the operating instructions
- Improper use
- Deployment of non-trained personnel
- Arbitrary modifications
- Technical changes
- Use of non-approved spare and wear parts.

The actual scope of supply may differ from the explanations and illustrations described in this manual in case of special designs, if additional order options are made use of, or due to latest technical changes.

Incidentally, the responsibilities agreed upon in the delivery contract, the general terms and conditions as well as the manufacturer's conditions of delivery and the statutory provisions valid at the time of contract conclusion shall apply.

In no event shall MAGNETIC be liable for any incidental, indirect, special or consequential damages in connection with the use of the product.

1.4 Copyright protection

MAGNETIC retains sole and exclusive ownership of all intellectual property rights with respect to the products.

Surrendering the operating instructions to third parties without written permission of the manufacturer is not permitted.

NOTE!

Content details, texts, drawings, pictures and other illustrations are protected by copyright and are subject to industrial property rights. Any improper use shall be liable to prosecution.

Any type and form of duplication – also of extracts – as well as the exploitation and/or communication of the contents are not permitted without the manufacturer's written declaration of consent.

1.5 Scope of delivery

The scope of delivery comprises:

- 1 barrier housing
  incl. drive unit and control
- 1 Barrier
- 2 Mounting profiles
- 2 Warning signs
- Options if applicable
- Documentation for the barrier.

1.6 Warranty

Subject to the condition that the operating instructions are observed, and that no inadmissible operations are carried out on the technical equipment, and that the installation has suffered no mechanical damage, MAGNETIC grants a warranty on all mechanical and electrical components of the product to the extent as stated in its standard terms of sales and delivery or as contractually agreed in writing.

MAGNETIC makes no warranties, express or implied, regarding the products, including the value, design, condition, merchantability or fitness for particular purpose or use of the products.

1.7 Customer service

Your vendor is available to you for technical information

For the address, see invoice, delivery note or the reverse of these instructions.

NOTE!

In order to enable fast handling note the data of the type plate such as type code, serial number, version etc. before calling.

1.8 UL-Declaration

UL-Declaration refer to page 113. The UL-Declaration applies for the MAGNETIC MHTM™ MicroDrive barrier types Toll and Toll Pro.

1.9 Environmental protection

NOTICE	
	Danger for the environment by improper disposal of components or the barrier! In case of improper disposal of components or the barrier, damage to the environment may result. – Observe the local and national laws and directives. – Disassemble barrier according to resources. Sort resources and supply them to recycling.

2 Safety

2.1 Intended use of the barriers

The MAGNETIC MHTM™ MicroDrive barrier is intended for installation only on passageway used for vehicles. Pedestrians must be supplied with a separate access opening. The pedestrian access opening shall be designed to promote pedestrian usage. Locate the barrier such that persons will not come in contact with the vehicular passageway during the entire path of travel of the vehicular barrier.

The barrier is either controlled by a person in manual operating modes or by access control systems in automatic operating modes and monitored by induction loops and/or safety light barriers.

Electrical energy is used exclusively for operating the barrier. The barrier arm weight is balanced out by spring energy.

The barrier consists of the barrier housing with drive system and control, as well as the barrier arm.

2.1.1 Intended use for certain road vehicles

Certain road vehicles according to chapter 2.1 paragraph 1 need to have sufficiently large metal areas in the vehicle floor area to enable detection by induction loops.

Other or complementary safety facilities must be provided for road vehicles that cannot be detected by induction looks due to the metal area in the vehicle floor area being too small.

2.1.2 Non-Intended use

Control of pedestrian traffic as contrary to intended use.

The barriers must not be used at railway crossings.

The barriers are not approved for pedestrian traffic, bicycles or animals.

The barriers must not be used in explosive environments.

All uses not described as intended use are prohibited.

No accessories must be connected or installed if they are not specified expressly according to quantity and characteristics and approved by Magnetic Autocontrol.

⚠ WARNING	
	Non-intended use is dangerous! Every non-intended use can lead to dangerous situations. – Only use barrier as intended. – All specifications in these operating instructions have to be strictly complied with.

Any types of claims due to damage arising from improper use are excluded. The operator alone shall be responsible for any damage arising from improper use.

2.2 Operator's responsibility

The operator must comply with the statutory obligations regarding work safety.

In addition to the work safety notes in these operating instructions, the safety, accident prevention and environmental provisions applicable for the area the barrier is used in must be complied with.

In particular, the operator must:

- gather information on applicable work protection provisions.
- determine additional dangers in a risk assessment.
- implement the required method of operation of the barrier on site from the operating instructions.
- regularly verify throughout the barrier's time of use that the operating instructions drawn up by him comply with the current state of the regulations.
- adapt the operating instructions to any new provisions, standards and usage conditions - where required.
- clearly determine the responsibilities for installation, operation, maintenance and cleaning of the barrier.
- ensure that all employees that are working at or with the barrier have read and understood the operating instructions.
- Furthermore, the operator must train personnel regarding the use of the barrier at regular intervals and provide information on possible dangers.

Furthermore, the operator is responsible for:

- keeping the barrier in perfect technical order and condition at all times.
- maintaining the barrier according to the maintenance intervals and performing the safety inspections as stipulated.
- checking all protective facilities for completeness and proper function at regular intervals.

The operator is also responsible that the danger area of the barrier arm cannot be accessed by any unauthorised, and in particular not by children, under any circumstances.

2.3 Changes and modifications

Changes, modifications and re-builds of the barrier or installation can cause unforeseen danger.

A written authorisation of the manufacturer is required before executing any technical changes and extensions on the barrier.

2.4 Specialists and operating personnel

2.4.1 Requirements

⚠ WARNING

Risk of injury in case of inadequate qualification!

Improper handling can lead to considerable bodily injuries and property damage.

– Have any activities only carried out by the individuals designated for that purpose.

The operating instructions specify the following qualification requirements for the different fields of activity:

- **Instructed people**
  have been instructed during instructions provided by the operator with regard to the work assigned to them and possible hazards arising from improper conduct.
- **Specialised staff**
  are able, due their technical training, knowledge and experience as well as their knowledge of the pertinent regulations able to carry out the work assigned to it and to independently recognize potential hazards.
- **Electrical specialists**
  are able, due to their technical training, knowledge and experiences as well as knowledge of the relevant standards and regulations, to execute tasks on electrical systems and to independently recognize possible hazards.
  In Germany, the electrical specialist must comply with the provisions of accident prevention regulation BGV A3 (e.g. master electrical fitter). Appropriate regulations apply in other countries. The regulations valid there must be observed.
  The installation is to be made by a professional installer according to NFPA 70 National Electrical Code and Local Code.
- **MHTM™ MicroDrive service experts**
  comply with the requirements of the electricians named here. Additionally, these electricians are trained and authorised by MAGNETIC to perform special repair and service work on MHTM™ MicroDrive barriers.

It must be expected that only those people are deployed who carry out their work reliably. People, whose ability to respond is affected, e.g. by drugs, alcohol or medicines, must not be used. Furthermore, the age and profession-specific regulations valid at the operating location must be observed when selecting personnel.

2.5 Personal protective equipment

It is necessary to wear personal protective equipment when dealing with the barrier so as to minimise health hazards.

Before carrying out any work, properly dress in the necessary protective equipment such as work clothes, protective gloves, safety shoes, helmet and wear during work.

2.6 Occupational safety and special dangers

The remaining risks resulting from the risk analysis are specified in the following section.

Observe the safety notes listed here and the warning notes mentioned in the other chapters of these instructions to reduce health hazards and to avoid dangerous situations.

2.6.1 Danger symbols on the MHTM™ MicroDrive barrier

The relevant dangerous areas on the barriers can be identified by the following pictograms:

Electric voltage

⚠ DANGER	
	Mortal danger by electric voltage! ... indicates life threatening situations caused by electric voltage. Non-observance of the safety instructions causes severe injuries or death. Necessary work may only be carried out by an electrical specialist. This pictogram is fixed on the following component: – Assembly plate in the barrier housing.

⚠ WARNING	
	Danger of crushing! … indicates the presence of components and items moving towards each other. Non-observance of the safety instructions can lead to severe injuries. This pictogram is fixed on the following component: – At the access points for the lever system on the front and rear of the top assembly plate. – At the access point for the flanged shaft on the front and rear of the top assembly plate.

Hot surfaces

⚠ CAUTION	
	Danger of burns! … indicates the presence of a hot surface. Non-observance of the safety instructions can lead to minor injuries. This pictogram is fixed on the following component: – Motor in the barrier housing. – Heating (optional) in the barrier housing.

Moving arm

The following warning sign is installed on each side of the barrier arm.

Fig. 1: Warning signs for each side of the barrier arm

2.6.2 Hazard notes and occupational safety

For your own safety and for the protection of the barrier modules, the following information must be observed and complied with:

Electric voltage

⚠ DANGER	
	Mortal danger by electric voltage! Touching live parts can be lethal. Damage to the insulation or to individual components can be lethal. – Switch off the power supply immediately in case of damage to the insulation and arrange repair. – Only electrical specialists may carry out work on the electrical system. – Switch off power supply and secure against re-activation before performing any work. Test for absence of voltage! – Never bypass or deactivate fuses. – When replacing fuses observe the correct amperage specification. – Keep moisture and dust away from live parts. Moisture or dust may cause a short circuit. If the electrical connection is established during precipitation, e.g. rain or snow, penetration of moisture must be prevented by suitable measures, such as a protective cover.

Electric voltage – missing protective facilities

⚠ DANGER

Mortal danger by electric voltage!

The safety installations that are required according to regional and local regulations must be provided by the customer. Usually these are:

- Ground fault circuit interrupter (GFCI)
- Circuit-breaker
- Appropriate listed 2-pole main switch.

Thunderstorm, lightning, electric voltage

⚠ DANGER

Mortal danger from lightning and electrical voltage!

If lightning strikes the barrier, contact to the barrier components and direct proximity to the barrier includes mortal danger.

- Never install the barrier housing and barrier arm during thunderstorms.
- Protect yourself in buildings or vehicles.

Improper operation

⚠ WARNING

Danger from improper operation of the barrier!

Improper operation of the barrier can cause severe or lethal injuries!

- The barrier closes automatically in certain program modes. Passing of two vehicles within a single opening process must be prevented by the construction and appropriate signs or signals.
- The barrier is intended for a single drive direction at the same time. The operator must prevent concurrent oncoming traffic by suitable measures, such as signs.
- Only additions to the barrier housing or arm that are permitted by the manufacturer may be installed.
- Keep barrier area free from objects.
- Do not use the barrier arm as a lifting device.
- Never climb over or crawl under arm.
- Never sit on the barrier housing or climb over it.
- Do not sit or have yourself lifted by the arm.
- Never open or stop the arm manually.

Entering the danger area of the barrier

⚠ WARNING

Danger from entering the danger area!

The MAGNETIC MHTM™ MicroDrive barriers are intended exclusively for closing off passages for motor vehicles and trucks. For vehicles that cannot be detected by induction loops, additional safety measures must be provided. Entering the danger area can cause severe or lethal injuries.

Therefore, the operator must take the following measures:

- Observing country-specific laws and regulations.
- Presence of persons and animals must be excluded.
- Marking the danger area by prohibition signs for persons, bicyclers, etc.
- If required, set up barriers such as fences and railings.
- If required, set up separate passageway for persons and bicycles.

Closing arm

⚠ WARNING

Danger from closing arm!

A closing arm may cause severe or lethal injury to persons, bicycler and cabriolet drivers!

- Install safety installations, such as a MAGNETIC safety light barrier as surveillance device. The surveillance device must prevent the closing of the barrier in case a person or a vehicle is standing below the barrier.
- Only use barrier arms approved of by MAGNETIC.

Improper transport

⚠ WARNING

Danger from improper transport of the barrier arm and housing!

The weight of the barrier arm or housing can severely injure a person!

- Have them transported by specialists only.
- Use lifting gear or forklift with a suitable pallet.
- Use suitable lifting gear (loops, etc.) for lifting the barrier arm and barrier housing. The lifting gear must be designed for the respective weights.
- Carrying and lifting the barrier arm and housing from the pallet should be done by at least two people.

Heavy weight

⚠ WARNING

Risk of injury when lifting heavy objects alone!

The weight of heavy objects can severely injure a person!

- Lifting and carrying the barrier arm and housing from the pallet should be done by a minimum of two people.

Falling components

⚠ WARNING

Risk of injury from falling components!

Falling components such as the barrier arm can cause severe injury!

- Only place the barrier arm horizontally.
- Only install the barrier arm when there is no or little wind.
- Secure the barrier housing against tilting before assembly.
- Install the barrier housing correctly.

Insufficient fixing

⚠ WARNING

Risk of injury at insufficient fixing!

Insufficient fixing of individual components such as barrier housing, barrier arm and additions permitted by the manufacturer can cause severe injury!

- Only qualified and skilled personnel are allowed to assemble the barrier and the appropriate components.
- Check the foundation anchors fit tightly before starting the barrier.
- Check the firm fixing of all screws according to maintenance schedule.

Danger of crushing, lever system and flange shaft

⚠ WARNING

Danger of crushing at opened barrier housing at the lever system and flange shaft!

The lever system and the flange shaft in the barrier housing can cause serious crushing injuries!

- Only skilled personnel are allowed work on the barrier housing and barrier arm.
- Only work at the barrier housing when the power supply is turned off.
- Assemble barrier housing without barrier arm.
- For assembly of the barrier arm, strictly observe the descriptions in chapter 8.8.
- Wear protective gloves if necessary.

Danger of crushing, barrier arm and flange

⚠ WARNING

Danger of crushing between barrier arm and barrier housing!

Moving parts may cause serious crushing injuries!

- Only skilled personnel are allowed work on the barrier housing and barrier arm.
- Only work at the barrier housing when the power supply is turned off

Illegible signage

⚠ CAUTION	
	Risk of injury by illegible symbols! Labels and signs can become dirty or unrecognisable in the course of time. – Always keep safety, warning and operating notes in a good readable condition. – Immediately renew damaged or unrecognisable signs or labels.

2.7 Danger area

Danger of crushing and shearing, barrier arm

⚠ WARNING

Danger of crushing and shearing when the barrier opens or closes!

When a barrier opens or closes, the barrier arm may lead to severe crushing or injury!

– Keep a distance of at least 2 ft (610 mm) between the barrier arm and other objects, such as walls, masonry or houses.
– Install the barrier system only when all exposed pinch points are eliminated or guarded.

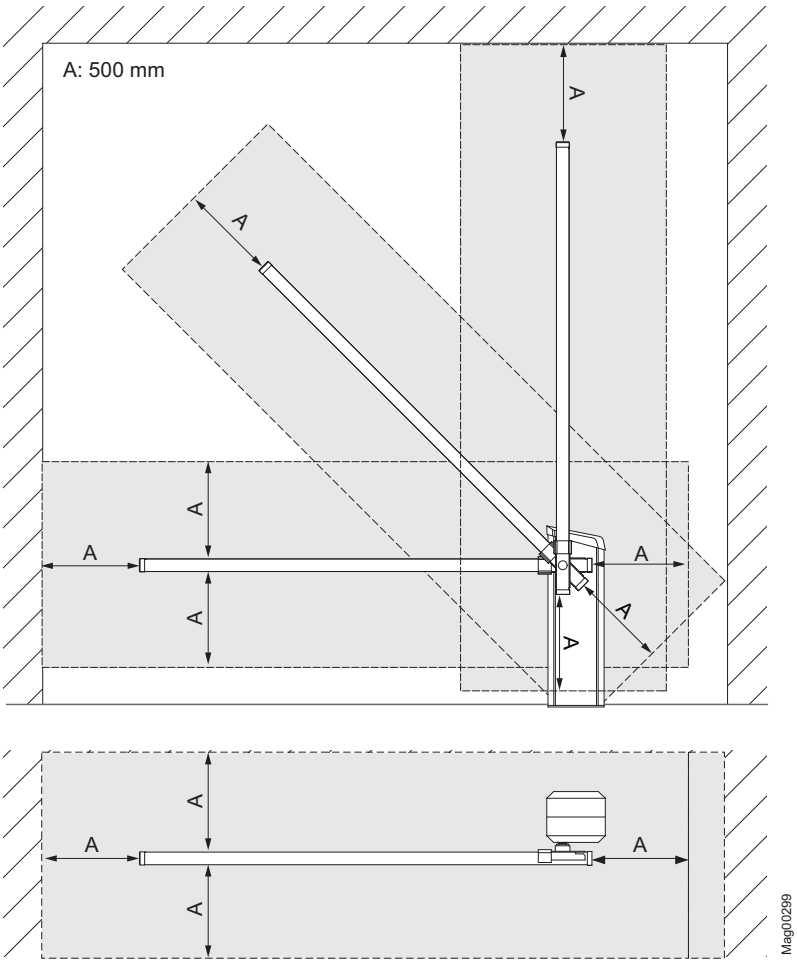

Fig. 2: Danger area

A Danger area of at least 2 ft (610 mm)

3 Identification

3.1 Type plate

The type plate is provided inside at the barrier housing, next to the hood attachment.

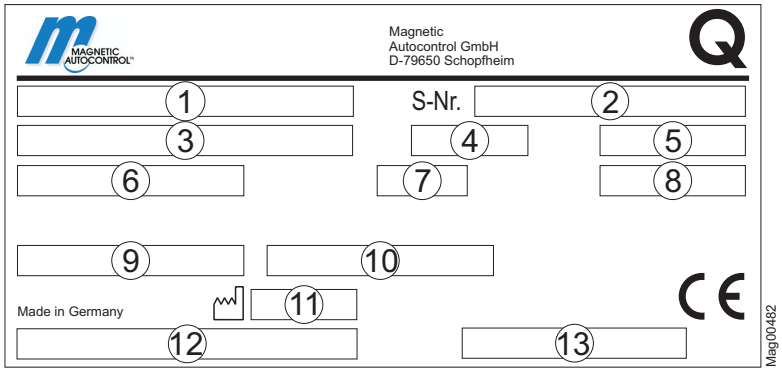

Fig. 3: Type plate

1 *Type code*
2 *Serial number*
3 *Power supply, Frequency*
4 *Current consumption*
5 *Power consumption*
6 *Operating time (Opening time/closing time)*
7 *Protection class*
8 *Duty cycle*
9 *Manufacturing year and month*
10 *Number of performance declaration*
11 *Product classification, here "Power operated barrier"*
12 *Bar code for type code*
13 *Bar code for serial number*

3.2 Type code

												–	R	A	0	3	0	0	0
1	2	3	4	5	6	7	8	9	10	11	12	13	14	15	16	17	18	19	20

Position	Description
1 – 12	Product group: TOLL — Magnetic.Toll TOLL PRO — Magnetic.Toll Pro TOLL HIGHSPEED — Magnetic.Toll HighSpeed
13	–
14	L = Left version R = Right version
15	A = Standard wide range 85 – 264 V AC / 47 – 63 Hz C = UL-version (US market) (Toll and Toll Pro only)
16 – 18	Line width Standard length: 010 = 10 feet 012 = 12 feet 015 = 15 feet 020 = 20 feet
19	Colours 0 = Top cover RAL 2000 (orange) Housing: RAL 2000 (orange) Doors: Similar RAL 7021 (black-grey) X = Special coats of paint
20	MGC type 0 = MGC-H100-0000 (without plug-in module) 1 = MGC-H100-0001 (with 1 x detector module) 2 = MGC-PRO-H-100-0001 (with 1 x detector module)

4 Technical data

4.1 Toll and Toll HighSpeed

4.1.1 Dimensions and weight

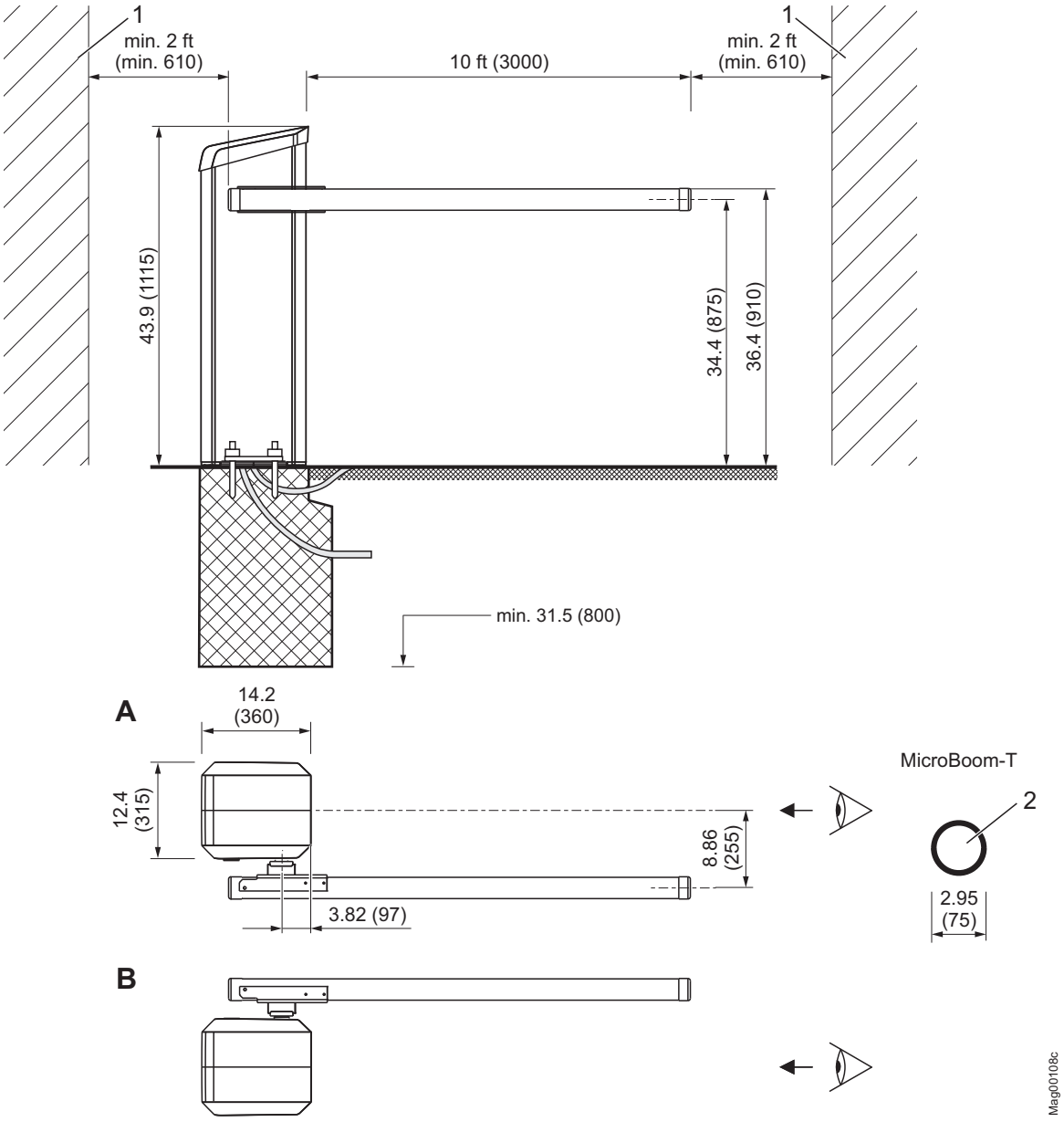

Fig. 4: Dimensions barrier system and barrier arm profile – "Toll" and "Toll HighSpeed" series
Dimensions in inch or feet are without parenthesis. Dimensions in mm are in parenthesis.

1 Object such as wall, building, etc.
2 MicroBoom-T (barrier arm) with round arm profile
A Barrier, left version
B Barrier, right version

Designation	Unit	Toll	Toll Pro	Toll HighSpeed
Lane width	ft (mm)	10 ft (3000)	10 ft (3000)	10 ft (3000)
Barrier housing (width x depth x height)	in (mm)	→ See page 28, Fig. 4. 12.4 x 14.7 x 43.2 (315 x 360 x 1115)		
Barrier housing weight	lbs (kg)	92.6 (42)		

Table 1: Dimensions and weight – "Toll" and "Toll HighSpeed" series

4.1.2 Electrical connection

Designation	Unit	Toll	Toll Pro	Toll HighSpeed
Supply voltage	V AC	85 to 264		
Frequency	Hz	50 / 60		
Max. current consumption	A	0.5 [1)]	0.8 [1)]	2.4 [3)]
Nominal power consumption	W	55 [2)]	95 [2)]	320 [3)]
Duty cycle	%	100		

1) The values refer to a power supply of 120 V AC / 60 Hz, with illumination, service socket not used. Using the service socket in the barrier housing increases the current consumption by 5 A.

2) The values refer to a power supply of 120 V AC / 60 Hz and without accessories.

3) The values refer to a power supply of 230 V AC / 50 Hz and without accessories.

Table 2: Electrical connection – "Toll" and "Toll HighSpeed" series

4.1.3 Operating conditions

Designation	Unit	Toll	Toll Pro	Toll HighSpeed
Ambient temperature	°F (°C)	–22 to +131 (–30 to +55)		
Storage temperature	°F (°C)	–22 to +158 (–30 to +70)		
Relative humidity	% r.F.	max. 95 %, non-condensing		
Wind force	Bft (Beaufort)	max. 10		
Protection class barrier housing	–	IP 54		

Table 3: Operating conditions – "Toll" and "Toll HighSpeed" series

4.1.4 Operating times

Designation	Unit	Toll	Toll Pro	Toll HighSpeed
Opening time	s	1.3	0.9	0.6
Closing time	s	1.3	0.9	0.6 / 0.9 / 1.3

Table 4: Operating times – "Toll" and "Toll HighSpeed" series

4.2 Control unit

Designation		Unit	MGC (MAGNETIC Gate Controller)
Supply voltage		V DC	24
Current consumption		–	max. 1 A, max. 300 mA + current consumption of the different plug-in modules
Power consumption		–	max 24 W, Max. 7.2 W + power consumption of the different plug-in modules
Control unit safety		–	1 A T
Output clamp X2	Output voltage	V DC	24
	Max. output current	mA	300
Digital inputs	Number	–	8
	Input voltage	V DC	24 ± 10 %
	Input current	–	< 10 mA per input
	Max. line length without overvoltage module [1)]	ft (m)	100 (30)
Digital outputs	Number	–	4 (open collector)
	Switching voltage	V DC	24 ± 10 %
	Max. switching current	mA	100
	Max. line length without overvoltage module [1)]	ft (m)	100 (30)
Output relay	Number	–	3 normally-open contact and 3 change-over contacts, isolated
	Max. switching voltage	V AC / DC	30
	Switching current	mA	10 mA to 1 A
	Max. line length without overvoltage module [1)]	ft (m)	100 (30)
Display		–	Graphics display, 128 x 65 Pixel
Language display		–	Selectable: German, English, French, Spanish, Italian, Portuguese, Swedish, Finnish, Norwegian, Danish, Estonian, Dutch
Number of slots for plug-in modules		–	5

1) For line lengths exceeding 30 m, overvoltage modules must be installed in front of the terminal clamps.

Table 5: Control unit

4.3 Plug-in module "Detector A–B"

Barriers with a type code that ends "1" or "2" contain a plug-in module "Detector A–B" by default. For barriers with a type code that ends "0", the plug-in module "Detector A–B" can be ordered as an accessory. → For identification of the control unit, see page 27, chapter 3.2, "Type code", position 20.

Designation	Unit	Plug-in module "Detector A–B"
Current consumption	mA	50
Number of loop detectors	–	2 (A and B)
Inductance range	µH	70 to 500
Number of induction loop sensitivity levels	–	10 levels
Response sensitivity induction loop	%	Selectable: 0.01 to 2.0

Table 6: Plug-in module "Detector A–B"

4.4 Plug-in module "Radio"

Designation	Unit	Plug-in module "Radio"
Current consumption	mA	20
Frequency hand transmitter	MHz	433
HF-Modulation	–	FM/AM (depending on region)
Grant of equipment authorization (Certificate)	–	FCC Identifier: QV2-SMD-53200RX FCC 02-157 → See page 115, chapter 15.

Table 7: Plug-in module "Radio"

5 Design and function

5.1 Design

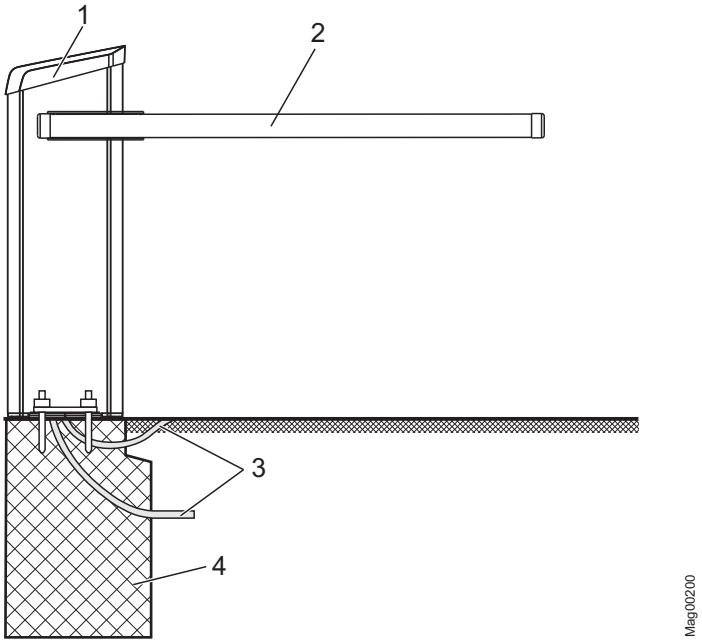

Fig. 5: Barrier system design series "Toll" and "Toll HighSpeed"

1 Barrier housing
2 MicroBoom-T (barrier arm)
3 Empty conduits for mains cable, control lines and induction loop
4 Concrete foundation with reinforcement

5.2 Function

The barrier consists of a barrier housing with drive system and a barrier arm.

The drive system consists of an electric motor, control unit, and the lever system. The lever system locks the barrier arm in both end positions. In case of power outage, the barrier arm can easily be moved by hand. Integrated balancing springs in the lever system balance out the arm weight exactly. These balancing springs are pre-set in the factory.

Sensors integrated in the motor supply exact data on every correct position of the barrier arm and thus serve the control unit to control the best acceleration and deceleration.

The barrier arm is designed as a "Swing Away". That means, if a vehicle should drive against the arm, it will snap from its flange. Depending on version, the barrier arm will automatically or by hand be returned to its original position.

Safety facilities like induction loops or safety light barriers must be installed on site in all cases. The safety installations must ensure that the barrier closes only after the vehicle has passed through. Safety installations, such as induction loops can be purchased from MAGNETIC. The safety light barriers must be MAGNETIC ones.

6 Transport and storage

6.1 Safety

Improper transport

⚠ WARNING

Danger from improper transport of the barrier arm and housing!

The weight of the barrier arm or housing can severely injure a person!

- Have transport performed by specialists only.
- Use lifting gear or forklift with a suitable pallet.
- Use suitable lifting gear (loops, etc.) for lifting the barrier arm and barrier housing. The lifting gear must be designed for the respective weights.
- Lifting and carrying the barrier arm and housing from the pallet should be done by a minimum of two people.

Heavy weight

⚠ WARNING

Risk of injury when lifting heavy objects alone!

The weight of heavy objects can severely injure a person!

- Lifting and carrying the barrier arm and housing from the pallet should be done by a minimum of two people.

Improper transport

NOTICE

The barrier system can be damaged by improper transport!

Substantial material damages can result from improper transport.

- Have transport performed by specialists only.
- When unloading the packages and during in-house transportation always proceed with greatest care and caution.
- Observe the symbols on the packaging.
- Observe the dimensions of the barrier system.
- Loading, unloading as well as moving the barrier system must take place with greatest care.
- Only remove packaging directly before assembly.

Personal protective equipment

The following must be worn during all transport work:

- Work clothes
- Protective gloves
- Safety shoes
- Protective helmet.

6.2 Transport inspection

Immediately check the delivery after receipt for completeness and transport damages.

Proceed as follows in the case of outwardly recognisable transport damage:

- Do not accept the delivery or only under reserve.
- Note the extent of damage on the transport documents or on the delivery note of the forwarder.
- Lodge complaint.

NOTE!

Lodge a complaint for each defect, as soon as it is recognized. Compensation claims can only be submitted within the valid complaint periods.

6.3 Transport

Barrier housing and barrier arm are delivered separately.

The lifting gear must be designed for the weight of the barrier housing and barrier arm.

For transport barrier modules refer to the safety notes on page 34, chapter 6.1.

For future transports:

- Secure loose cables.
- Secure against vibrations.
- Securely fasten the barrier housing and barrier arm prior to transport (e.g. screw it onto a pallet).
- Transport and put down barrier housing and barrier arm with a forklift and lift with suitable lifting gear.

6.4 Storage

Store the barrier or packages under the following conditions:

- Do not store outdoors.
- Store dry and dust free.
- Do not expose to aggressive media.
- Protect against solar irradiation.
- Avoid mechanical vibrations.
- Storage temperature: –22 to +158 °F (–30 to +70 °C)
- Relative humidity: max. 95 %, non-condensing
- Check the general condition of all components and packaging regularly, if they are stored for longer periods than 3 months.

7 Design notes for induction loops

→ For assembly and inspection, see page 49, chapter 8.4.

Please observe following points when dimensioning the induction loops:

- Induction loops respond only to metal. The mass is thereby not important, but the size of the loop's surface, which will be covered by the metal part is.
- The induction loops must not respond to persons or objects with a small metal portion like a bicycle for instance.
- Safety loops must secure the danger area underneath the barrier arm throughout the entire length.
- Opening loops must be installed right in front of the safety loop. The maximum distance between safety loop and opening loop must be not greater than max. 3.28 ft (1.0 m).

Arrangement passenger car loops – standard

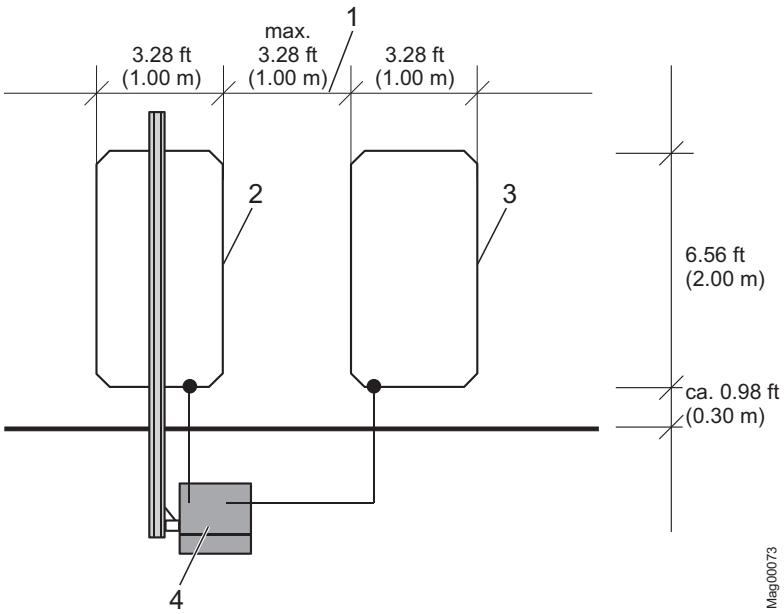

Fig. 6: Passenger car loop

1 *Maximum distance between opening loop and safety loop*
2 *Safety loop*
3 *Opening loop*
4 *Barrier*

Design notes for induction loops

Arrangement passenger car loops – passage with long opening loop

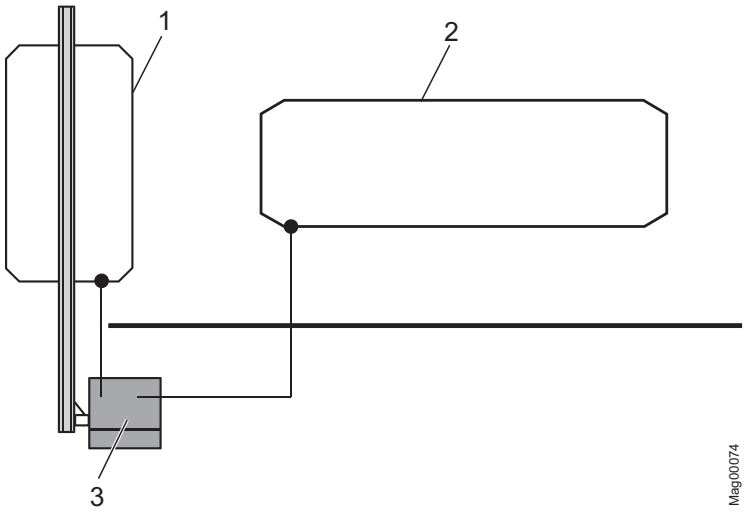

Fig. 7: Passenger car loops – passage with long opening loop

1 Safety loop
2 Opening loop
3 Barrier

Due to a long opening loop vehicles can drive through without needing to stop.

Arrangement of truck loops

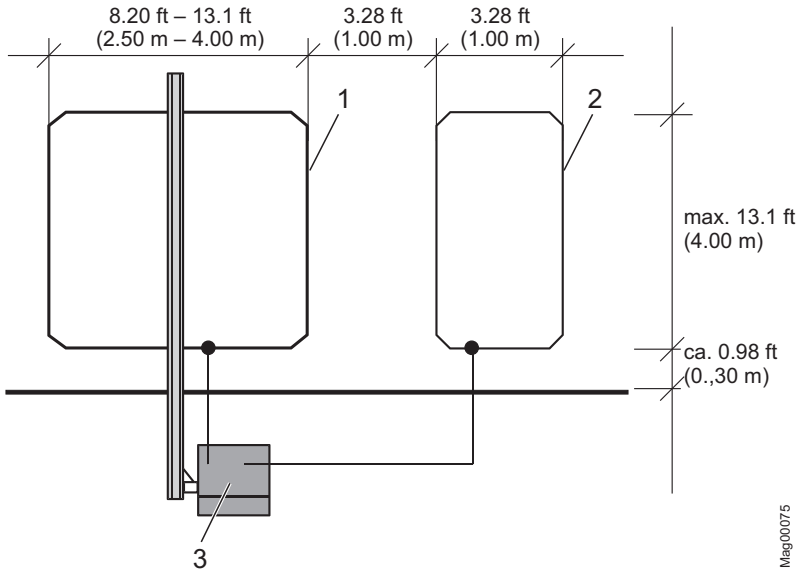

Fig. 8: Truck loops

1 Safety loop
2 Opening loop
3 Barrier

For truck passages the safety loop in the direction of travel must be at least 8.2 ft (2.5 m) long.

Arrangement of truck/ passenger car loops

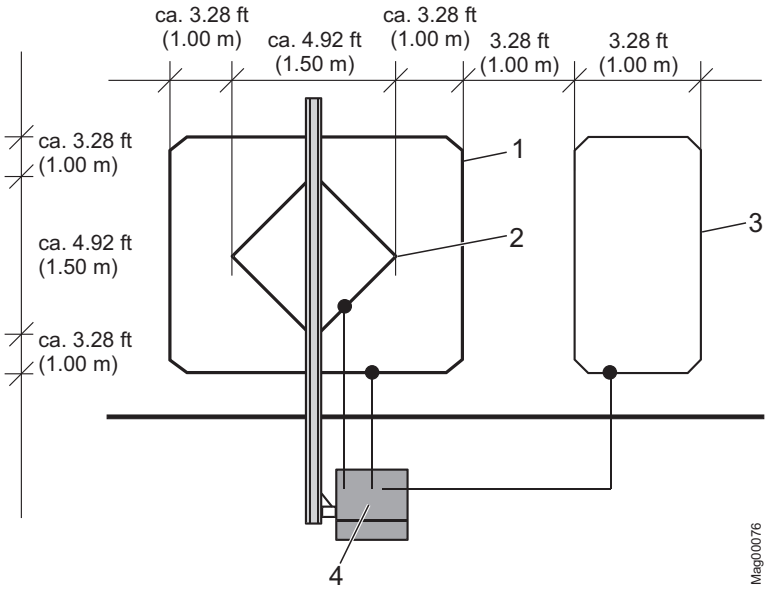

Fig. 9: Truck/passenger car loops

1 Safety loop truck (inductance L1)
2 Safety loop passenger car (inductance L2)
3 Opening loop truck and passenger car
4 Barrier

Observe overall inductance "L_{total}". For calculation, see below.

For combined truck/passenger car loops following points must be additionally observed:

- The winding direction of the inner safety loop for passenger cars must be identical to the outer safety loop for trucks. Meaning, the sensitivity in the middle between outer and inner loop is then at its maximum.
- Switch outer and inner loop together on one detector channel.
- The overall inductance determines, whether the truck and the passenger car loop have to be implemented as series or as parallel circuit. Always lead both feed lines into the barrier housing. The overall inductance must be between 70 and 500 µH.

Calculation of the overall inductance for series circuits

$$Ltotal = L1 + L2$$

Calculation of the overall inductance for parallel circuits

$$Ltotal = \frac{L1 \bullet L2}{L1 + L2}$$

8 Assembly and installation

8.1 Safety

→ See also safety notes on page 18, chapter 2.6 "Occupational safety and special dangers".

Non-intended use

⚠ WARNING

Non-intended use is dangerous!

Any use of the barriers other than intended and/or in a different manner can cause hazardous situations.

The barrier system is intended for installation only on crossings used for vehicles. Pedestrians must be supplied with a separate access opening. The pedestrian access opening shall be designed to promote pedestrian usage. Locate the barrier such that persons will not come in contact with the vehicular passageway during the entire path of travel of the vehicular barrier.

Danger of crushing and shearing, barrier arm

⚠ WARNING

Danger of crushing and shearing when the barrier opens or closes!

When a barrier opens or closes, the barrier arm may lead to severe crushing or injury!

- Keep a safety distance of at least 2 ft (610 mm) between the barrier arm and other objects, such as walls, masonry or houses. → See also page 25, chapter 2.7
- Install the barrier system only when all exposed pinch points are eliminated or guarded.
- Assemble and install barrier system according to Fig. 10.
- Controls intended for user activation must be located at least 6 ft (1.83 m) away from any moving part of the barrier and where the user is prevented from reaching over, under, around or through the barrier to operate the controls. Outdoor or easily accessible controls shall have a security feature to prevent unauthorized use.

General

⚠ WARNING

Danger by inappropriate installation!

Inappropriate installation can cause severe injuries!

- Only specialist personnel or electrical specialists must perform any assembly and installation tasks.
- Prior to work, ensure that there is sufficient assembly space.
- Pay attention to tidiness and cleanness at the assembly site! Loosely stacked or lying around components and tools are accident sources.
- Comply with specifications for foundations and reinforcement.
- Ensure correct arrangement and fit on all assemblies and components.
- Install the indicated fastening elements correctly.

Personal protective equipment

The following must be worn during all assembly and installation work:

- Work clothes
- Protective gloves
- Safety shoes
- Protective helmet.

8.2 Required steps

The following steps are to be completed prior to assembly and installation:

- Laying the foundation with reinforcement for the barrier and install empty conduits.
- Set up foundation for light barrier post and empty conduits.
- Installing induction loops.

The following procedures have to be observed during assembly and installation:

- Unpack barrier and accessories.
- Mount barrier housing on the foundation.
- Remove transport protection.
- Mount light barrier post on the foundation.
- Mount safety light barrier.
- Mount barrier arm.
- Adjust balancing springs.
- Align barrier housing and light barrier post.
- Assemble and install signalling device.
- Arrange electrical connections. → See page 73, chapter 9.

8.3 Foundation and empty conduits

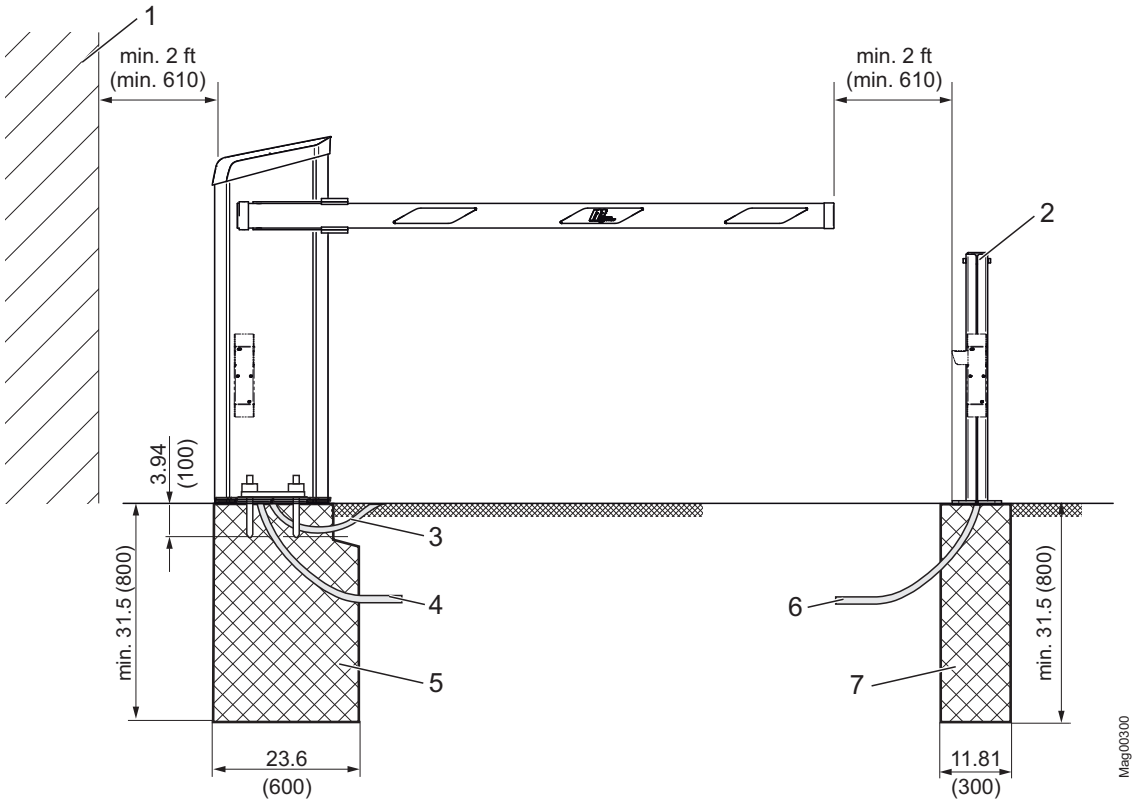

Fig. 10: Assembly barrier system
Dimensions in inch or feet are without parenthesis.
Dimensions in mm are in parenthesis.

1 *Object such as wall, building, etc.*
Keep a safety distance of at least 2 ft (610 mm) between the barrier arm and other objects, such as walls, masonry or houses. → See page 25, chapter 2.7
2 *Optional: Light barrier post, place post at a distance of at least 2 ft (610 mm) to the barrier arm tip*
3 *Empty conduit for induction loop connection*
4 *One empty conduit each for mains cable and control lines*
5 *Foundation with reinforcement grid for barrier housing*
6 *Optional: Empty conduit for safety light barriers, connection line receiver*
7 *Optional: Foundation for light barrier post*

8.3.1 Foundation and empty conduits for the barrier

Assembly site

The assembly site must meet the following requirements:

- The barrier must be visible from the operating person.
- The barrier must not be put up where there is a danger of flooding.
- Keep a safety distance of at least 2 ft (610 mm) between the barrier arm and objects such as walls, buildings, etc.
  → See page 25, chapter 2.7 and page 43, Fig. 10.

Foundation and reinforcement

The foundation must meet the following requirements:
→ See page page 43, Fig. 10 and page 45, Fig. 11.

- Have sufficient load-carrying capacity.
  (concrete foundations: C35/45 XD3 XF2)
- Water cement value: 0.5
- Foundation depth: at least 31.5 in (800 mm), frost-protected foundation depth to be adjusted to the local situation.
- Foundation section: 17.7 in x 23.6 in (450 mm x 600 mm)
- Reinforcing mesh as shown in figure Fig. 12.
- Surface has to be non-combustible material.

Empty conduits

The empty conduits must meet the following requirements:
→ See page 45, Fig. 11.

- Separate empty conduits for mains cable and control line
  Diameter: 1.14 ft (29 mm) each
- Optional empty conduit for induction loop.
  Diameter: 1.14 (29 mm) each
- Conduits have to be planned to a sufficient length.

NOTE!

To provide a trouble-free operation use separate conduits for control lines and mains cables.

Laying the foundation, Installing empty conduits

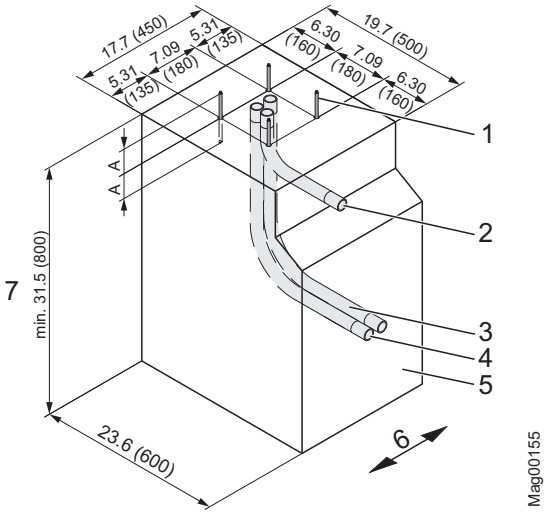

Fig. 11: Foundation plan
Dimensions in inch or feet are without parenthesis.
Dimensions in mm are in parenthesis.

1 *Foundation anchor (4 pcs.)*
2 *Optional when using loop connection; empty conduit for loop connection, diameter: 1.14 in (29 mm)*
3 *Empty conduit for induction loop, diameter: 1.14 in (29 mm)*
4 *Empty conduit for control lines, diameter: 1.14 (29 mm)*
5 *Concrete foundations (C35/45 XD3 XF2)*
6 *Roadway*
7 *Foundation depth: at least 31.5 in (800 mm), frost-protected foundation depth to be adjusted to the local situation.*

1. Dig foundation hole pursuant to Fig. 10 and Fig. 11.

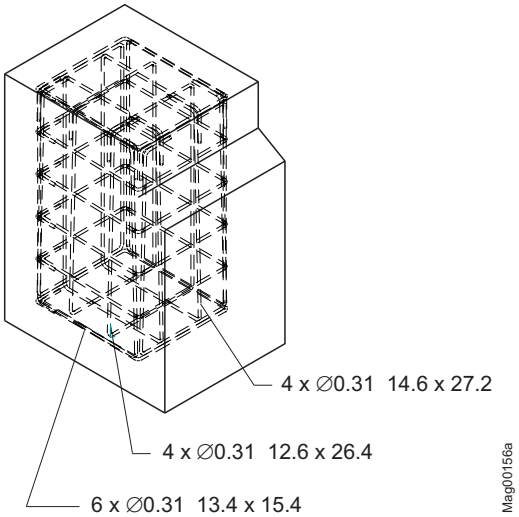

Fig. 12: Reinforcement grid
Dimensions in inch or feet are without parenthesis.
Dimensions in mm are in parenthesis.

2. Place reinforcement grid pursuant to Fig. 12 in the foundation hole.
3. Place empty conduits pursuant to Fig. 11 in the foundation hole.
4. Close empty conduits to prevent water from entering.
5. Fill concrete foundation pursuant to Fig. 10.
6. Create flat line in the base area. The following requirements must be fulfilled:
   - Level and horizontal.
   - Surface deviation: max. 0.00732 in/ft^2 (2 mm/m^2)
7. Let concrete cure.
8. Apply moisture protection agent to concrete surface.

NOTE!

We recommend applying moisture protection either in the form of sealing sludges such as 1100 Hansit or ready-made solution such as Sikagard® 703 W or deepdry® to the concrete surface before housing assembly. Moisture protection prevents entering of moisture into the housing from the concrete floor.

8.3.2 Foundation and empty conduits for light barrier post

Dimensions

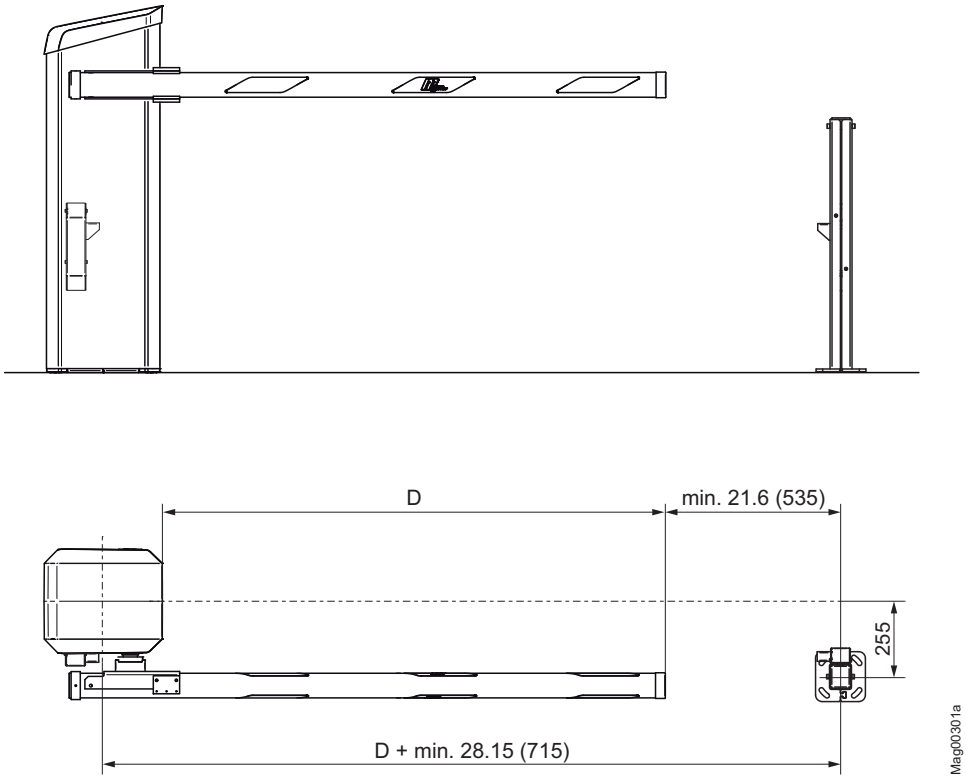

Fig. 13: Dimensions barrier housing – light barrier post
Dimensions in inch or feet are without parenthesis.
Dimensions in mm are in parenthesis.

Assembly site

The light barrier post must not be put up where there is a danger of flooding.

Foundation

The foundation must meet the following requirements:
→ See page 43, Fig. 10 and page 48, Fig. 14.

- Have sufficient load-carrying capacity.
  (concrete foundations: C35/45 XD3 XF2)
- Water cement value: 0.5
- Foundation depth: at least 31.5 in (800 mm), frost-protected foundation depth to be adjusted to the local situation.
- Foundation section: 11.81 x 11.81 in (300 mm x 300 mm)

Empty conduit

If the barrier system is equipped with a light barrier, an empty conduit must be installed for the transmitter connection line. Conduits have to be planned to a sufficient length.

Laying the foundation, installing empty conduits

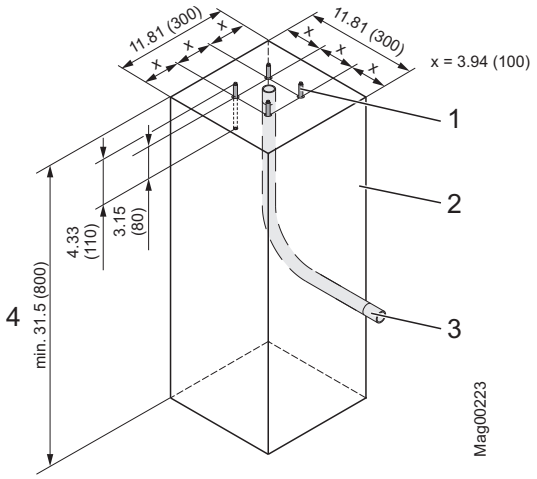

Fig. 14: Foundation plan for light barrier post
Dimensions in inch or feet are without parenthesis. Dimensions in mm are in parenthesis.

1 Foundation anchor (4 pcs.)
2 Concrete foundations (C35/45 XD3 XF2)
3 Optional for light barriers:
Empty conduit for receiver connection line
4 Foundation depth: at least 800 mm, frost-protected
foundation depth to be adjusted to the local situation.

1. Dig foundation hole pursuant to Fig. 10 and Fig. 14.
2. Place empty conduit pursuant to Fig. 14 in the foundation hole.
3. Close empty conduit to prevent water from entering.
4. Fill concrete foundation pursuant to Fig. 14.
5. Create flat line in the base area. The following requirements must be fulfilled:
   - Level and horizontal.
   - Surface deviation: max. 0.00732 in/ft^2 (2 mm/m^2)
6. Let concrete cure.

8.4 Assembly and installation of induction loops

Depending on the application safety installations must be installed on site. Induction loops, light barriers, etc. can be used as safety installations.

The safety installations must ensure that the barrier closes only after the vehicle has passed through. Safety installations, such as induction loops can be purchased from MAGNETIC.

8.4.1 Directions for the assembly and installation of induction loops

On barriers with an automatic closing function induction loops are used for the detection of vehicles. The loop underneath the barrier arm always serves as monitor and closing loop. Meaning, as long as a vehicle is standing on the loop, the barrier stays open. Only after the vehicle has left the loop will the barrier be closed.

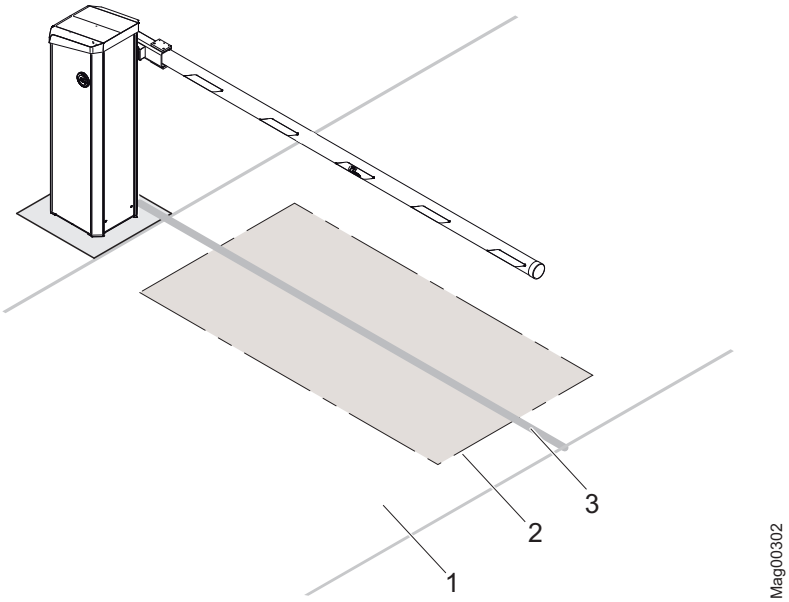

Fig. 15: Arrangement example of an induction loop for passenger car operation

1 Roadway
2 Induction loop
3 Projection of the barrier arm onto the subsurface with a standard installation of the loop

→ The induction loop setup depends on the application case. For other application cases, refer to page 37, chapter 7.

Please observe following points when installing the induction loop:

Loop geometry and clearances

- Install the loop symmetrically to the barrier arm. Please make sure that the barrier arm is attached to the side of the barrier housing.
- The clearance of the safety loop for passenger cars in front of, and behind the barrier arm must be at least 19.7 in (500 mm). The safety loop for trucks must be dimensioned larger.
  → See page 28, Fig. 4.
- The distance of the induction loop from the roadside should be about 11.8 in to 19.7 in (300 to 500 mm).
- Install opening loops right in front of the safety loop. The clearance between opening loop and safety loop must be not greater than 3.28 ft (1 m) for trucks and passenger cars.
- If there are iron reinforcements, ramp heating etc. in the roadway, the induction loop must have a clearance of at least 1.97 in (50 mm) from those. Metals in the proximity of the induction loop affect the response sensitivity.
- Avoid direct contact of induction loops with reinforcement and ramp heating.
- Install induction loops with sufficient clearance from sliding gates, roller grilles etc.

Installation and ground conditions

- Please make sure when moulding or installing that the loop can not move anymore once it is in operation. Any geometric alteration will act as inductance change, which will set the detector to an error state.
- Brittle road surfaces, loose pavements, gravel paths etc. are not suited for the application of induction loops.

Feed line

- The feed line to the loop must not exceed 49.2 ft (15 m).
- The loop connection cable must protrude about 4.9 ft (1.5) m from the foundation.
- Shorten the feed line to the loop to the proper length. The feed line must by no means be coiled.
- The feed line must be twisted up to right in front of the terminals of the loop detector with ca. 6 twists per feet.

8.4.2 Induction loops

The induction loops are available as ready assembled cables in various lengths from several manufacturers. Make sure that they meet the specification described in these operating instructions.

Alternatively a loop can be manufactured from single wire. The following requirements must be fulfilled:

- Wire cross section: 18 to 16 AWG (0.75 to 1.5 mm^2)
- Inductivity of the loop: 70 to 500 µH. This is equivalent to a loop with 3 to 6 windings.
- When using hot pouring compounds, such as bitumen temperature resistant loop cables/strands must be used.

8.4.3 Testing induction loops

To verify the contact resistance, insulation resistance, and inductance of the loop these properties must be measured after installation:

- Contact resistance: 0.8 to 2.0 ohms
- Insulation resistance to earth: > 1 Mohm.
- Inductivity of the loop: 70 to 500 µH

If the values are not within the specified ranges, the loop is defective.

8.4.4 Installing induction loops in bitumen, asphalt, or concrete

1. Cut a 1.97 in (50 mm) deep groove into the surface or asphalt using a cutting disc. The groove must be equally deep at every point. According to Fig. 14 the corners of the groove must be cut in a 45° angle.

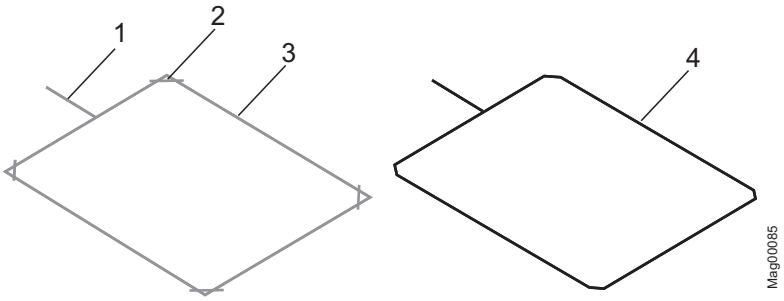

Fig. 16: Installing induction loop in bitumen, asphalt, or concrete

1 Groove for induction loop feed line
2 Corners cut diagonally
3 Groove for induction loop
4 Induction loop

2. Lay the loop carefully into the groove and push it down by means of a blunt object, such as a piece of wood. The insulation must by no means be damaged.
3. To avoid slipping of the loop, fix the loop using small wooden wedges. Remove the wooden wedges later on.
4. Push the loop feed line through the empty conduit in place into the barrier housing.
5. Measure the induction loop according to chapter 8.4.3.
6. We recommend to cover the inserted loop using quartz sand. Make sure that at least 0.98 in (25 mm) remain between the upper edge of the roadway and the quartz sand for the potting compound.
7. Seal the groove with the potting compound.
   - The temperature resistance of the loop must match the temperature of the potting compound.
8. Allow the potting compound to cure.

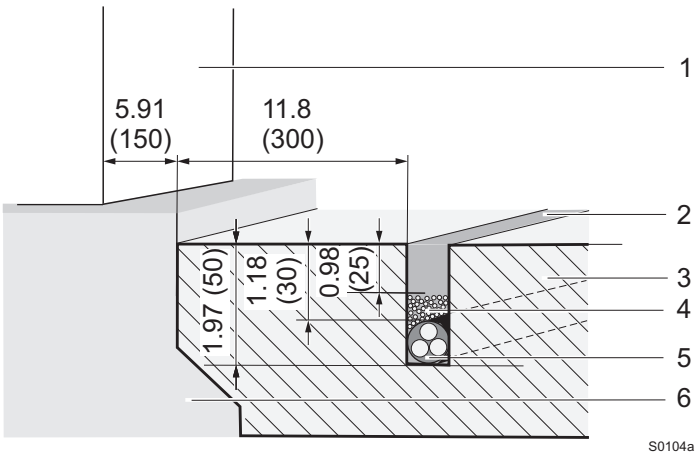

Fig. 17: Installing induction loop in bitumen, asphalt, or concrete Dimensions in inch are without parenthesis. Dimensions in mm are in parenthesis.

1 Barrier housing
2 Groove with potting compound
3 Asphalt surface
4 Quartz sand filling
5 Loop cable
6 Foundation

8.4.5 Installing induction loops under interlocking stone paving

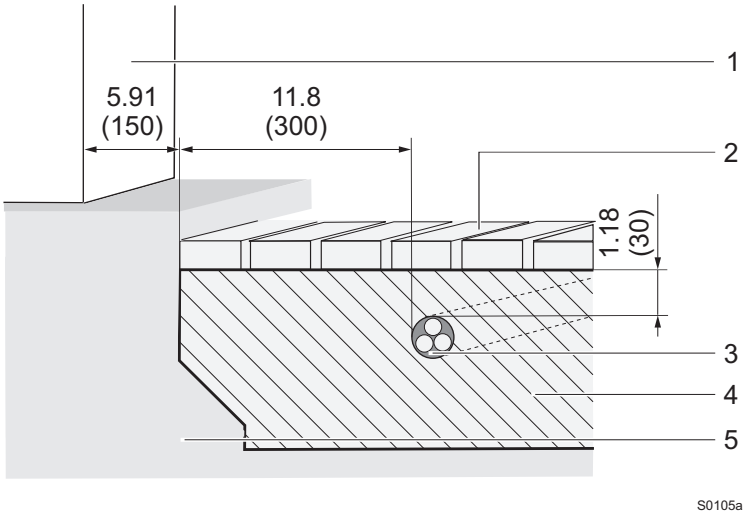

Fig. 18: Installing an induction loop under interlocking stone paving Dimensions in inch are without parenthesis. Dimensions in mm are in parenthesis.

1 Barrier housing
2 Paving
3 Loop cable
4 Sand bed
5 Substructure

When installing induction loops under interlocking stone paving, following points must be observed additionally:

- Use only pre-assembled cables.
- Install the induction loop in sand only. The induction loop must not be installed in gravel or split.
- The induction loop must not slip or shift or be damaged during later vehicle traffic.
- Keep a minimum clearance between paving and loop cable of approx. 1.18 in (30 mm).

8.5 Unpacking

The individual packages are packed according to the expected transport conditions. Only environment-friendly materials have been used for the packaging.

The packaging should protect the individual components against transport damages, corrosion, etc up to the assembly. Therefore do not destroy the packaging and remove only directly before assembly.

1. Unpack barrier.
2. Set up barrier housing vertically.
3. Lay down barrier arm.
4. Unpack and lay out accessories.
5. Separate material according to type and size and recycle them after use.

8.6 Opening barrier housing

Drive system, balancing springs, connection terminals and control are protected with a hood and two doors. In most cases, it is sufficient to remove the hood and the door facing away from the road.

Hood and door facing away from the road

1. Unlock lock at the door facing away from the road.
2. Lift hood upwards. For this, push the hood back and lift it from the two disconnections.
3. Pull out the door upwards.

Door facing the road

4. Loosen and remove the two hexagon screws with hexagon socket.
5. Pull out the door upwards.

After any work

6. Install doors.
7. Attach and lock the hood.

8.7 Assemble housing

The barrier housing is attached by 4 foundation anchors via 2 attachment profiles. The attachment profiles are included in delivery.

Requirements mounting material

MAGNETIC Automation Corporation recommends using ∅ 3/8" anchor bolts. → Refer to the anchor bolt manufacturers installation requirements.

1. The foundation must have cured.

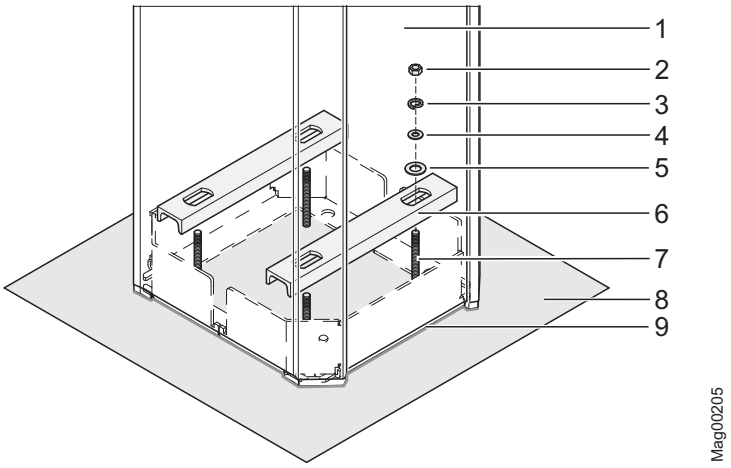

Fig. 19: Assemble housing

1 Barrier housing
2 Nut
3 Spring washer
4 Washer d8,4
5 Washer d13
6 Mounting profile
7 Foundation anchor
8 Foundation
9 Silicon sealant

2. Drill holes for the foundation anchors according to the foundation plan, page 45, Fig. 11 in compliance with the indicated sizes.
   - Drill-hole distance: 7.01 in (180 mm), square alignment
   - Depth: 3.15 in (80 mm)
     (At this drilling depth, a minimum tensile strength of 1.98 kpf (8.8 kN) must be guaranteed.)
3. Place four foundation anchors.
4. Set up barrier housing upright on foundation.
5. Barrier housing attached to mounting profile on the foundation with foundation anchors. Tighten nuts slightly for this.
6 Align barrier housing. Tighten nuts firmly. If a light barrier post is installed, observe page 68, chapter 8.13.
7. Seal barrier housing with silicon sealant.

8.8 Assemble light barrier post

The light barrier post is attached with 4 foundation anchors each.

Requirements mounting material

MAGNETIC Automation Corporation recommends using ∅ 3/8" anchor bolts. → Refer to the anchor bolt manufacturers installation requirements.

Assemble light barrier post

1. The foundation must have cured.
2. Drill holes for the foundation anchors according to the foundation plan, page 48, Fig. 14 in compliance with the indicated sizes.
   - Drill-hole distance: 3.94 in (100 mm), square alignment
   - Depth: 3.15 in (80 mm)
     (At this drilling depth, a minimum tensile strength of 2.02 kpf (9 kN) must be guaranteed.)
3. Set four foundation anchors.
4. Set up post upright on foundation.
5. Attach the post to the foundation with the anchor bolts and tighten the nuts securely.

8.9 Assemble safety light barrier

Only MAGNETIC safety light barriers must be used.

8.9.1 Assemble transmitter

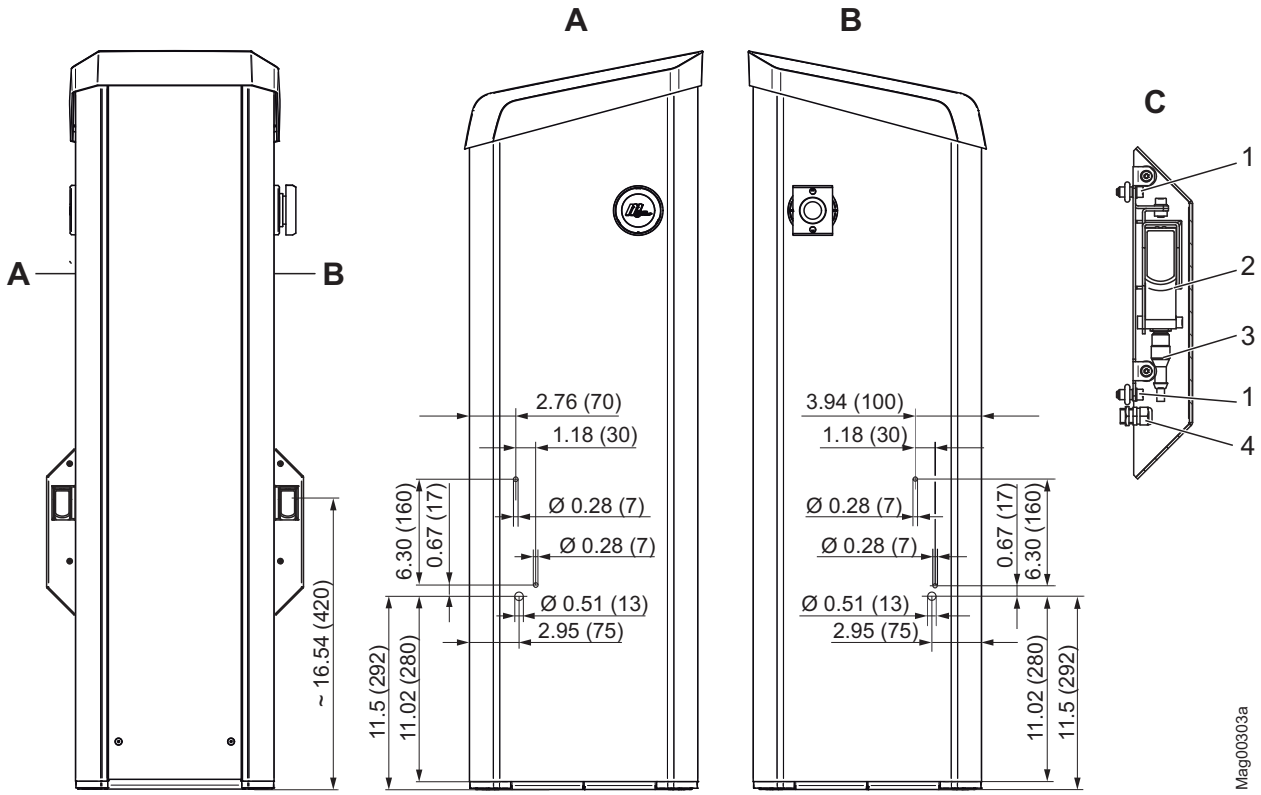

Fig. 20: Assemble the transmitter's light barrier housing on the barrier housing
Dimensions in inch or feet are without parenthesis. Dimensions in mm are in parenthesis.

A View A
B View B
C Light barrier housing transmitter

1 Hexagon socket screws 5 AF
2 Transmitter
3 Transmitter connection line
4 Cable screw connection

1. Drill holes for the light barrier housing according to Fig. 20.
2. Mount the cable screws at the housing with locknuts.
3. Connect connection line for transmitter to the control unit.
4. Guide connection line through cable screws.
5. Mount light barrier housing to housing with the hexagon socket screws 5 AF.

8.9.2 Assemble receiver

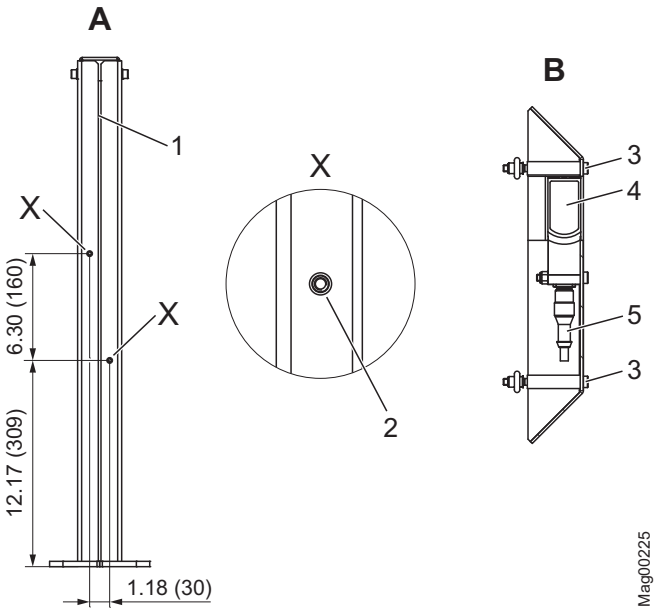

Fig. 21: Assemble the receiver's light barrier housing on the post Dimensions in inch or feet are without parenthesis. Dimensions in mm are in parenthesis.

A Light barrier post
B Light barrier housing

1 Gap
2 Drill holes for blind rivet nut
3 Hexagon socket screws 5 AF
4 Receiver
5 Receiver connection line

1. Press the two blind rivet nuts into the two intended bores at the post.
2. Guide the connection line for receiver through the gap in the post.
3. Connect connection line for receiver to the receiver.
4. Mount light barrier housing to housing with the hexagon socket screws 5 AF.
5. Close empty conduits with construction foam to prevent water from entering them.

8.10 Assembling flange and barrier arm

Do not grease

NOTICE

Improper lubrication of components, in particular the counter bearing or flange shaft, may lead to damage of the equipment!

– Do not grease the counter bearing and flange shaft.

Switch off power supply.

1. Secure barrier danger area e.g. with barrier tape.
2. Remove the barrier housing hood.
3. Remove the barrier housing door.

WARNING!

Danger of crushing between barrier arm and barrier housing!

4. Switch off power supply. Ensure that the system is powered down. Secure against reactivation. The balancing springs in the lever system are relaxed.

Assembling flange

5. Install the flange on the flange plates with the 2 hexagon socket screws 8 AF. Make sure:
   - Tighten the screws evenly with a tightening torque of 44.254 lbf ft (60 Nm).
   - That the air gap between flange and flange plate must be consistent.

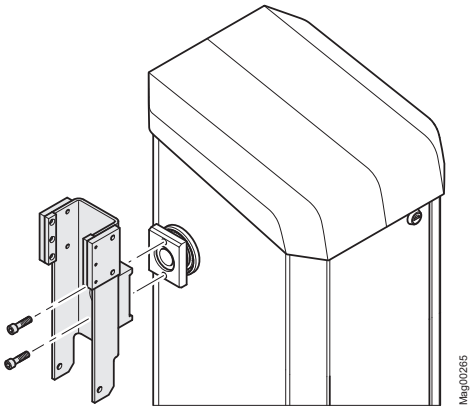

Fig. 22: Install flange to flange plate

Assemble barrier arm

6. Slide steel sleeve into the intended bore in the barrier arm.
7. Place barrier arm in the flange so that the barrier arm can be assembled.
8. Assemble barrier arm with hexagon screw, washer and hexagon nut.

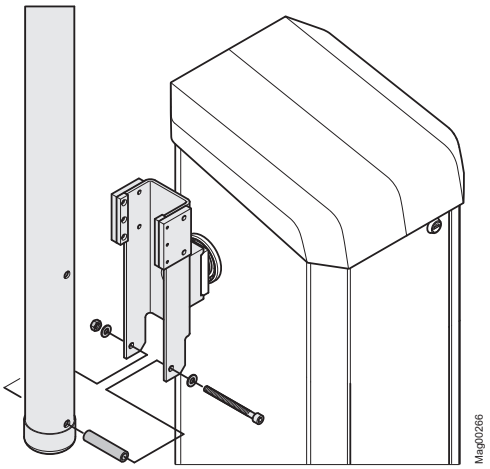

Fig. 23: Assemble barrier arm

Align barrier arm, switch on power supply

9. Push the barrier into the top-most position. The clamping lever must be at the stop for the position "opening". If required, push straight through the upper tool bore with a tool to press the lever arm from the dead point.
   → See page 107, chapter 12.5.

10. Check vertical alignment of the barrier arm. If required, correct position of the flange and the barrier arm via the hexagon socket screws at the clamping lever.

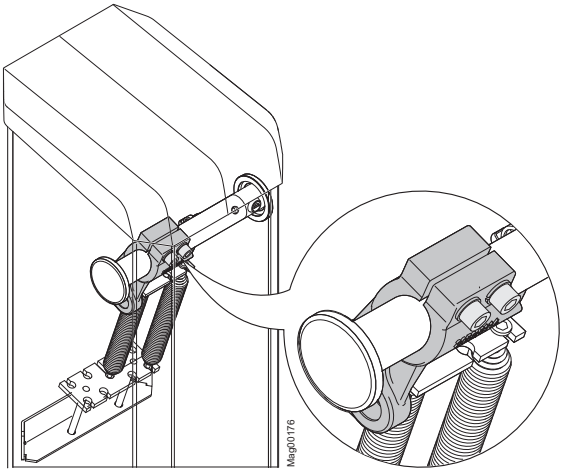

Fig. 24: Hexagon socket screws at the clamping lever

11. Switch on power supply.
12. Switch the "Service" switch on the control unit. The LED lights red. The display backlighting flashes.
13. Close the control unit with the middle right button at the control unit.
14. Check the horizontal alignment of the barrier arm with a spirit level and correct with the hexagon socket screws at the clamping lever if necessary.
15. Switch the "Service" switch on the control unit. The LED must light green.
16. Install the barrier housing door.
17. Attach and lock the barrier housing hood.

8.11 Conversion "left version" – "right version"

Do not grease

NOTICE

Improper lubrication of components, in particular the counter bearing or flange shaft, may lead to damage of the equipment!

– Do not grease the counter bearing and flange shaft.

All MHTM™ MicroDrive barriers are available as "left version" and "right version". → See type code, page 27 and as of page 28, Fig. 4.

If required, you can also remove the barrier arm yourself from one side of the barrier housing and replace it on the other.

Switch off power supply

1. Secure barrier danger area e.g. with barrier tape.
2. Remove the barrier housing hood.
3. Remove the barrier housing door.

WARNING!

Danger of crushing between barrier arm and barrier housing!

4. Switch off power supply. Ensure that the system is powered down. Secure against reactivation. The balancing springs in the lever system are relaxed.
5. The barrier must be open. Open barrier arm manually if required.
6. If required, loosen connection line to the barrier arm, e.g. for arm contact switch.

Remove barrier arm

7. Remove barrier arm. For this, loosen the hexagon screw at the flange.

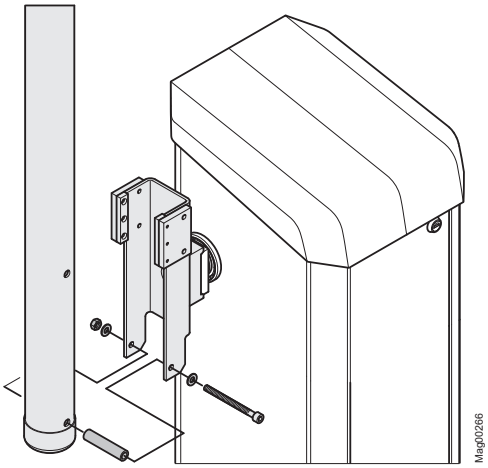

Fig. 25: Remove barrier arm

Convert flange shaft

8. Slightly loosen the two hexagon socket screws 10 AF of the clamping lever at the flange shaft. Do not remove the hexagon socket screws.

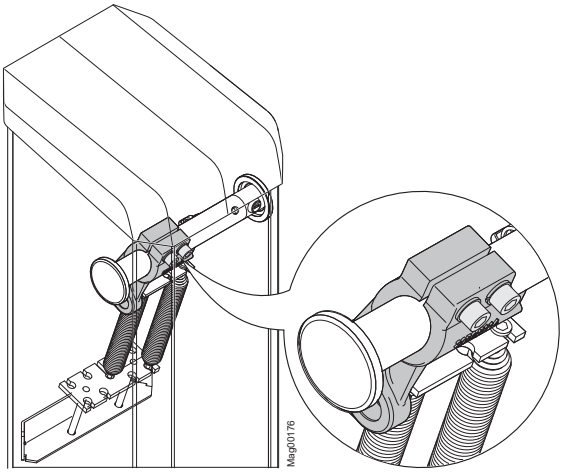

Fig. 26: Loosen hexagon socket screws at the clamping lever

9. Unhook the balancing springs at the top of the lever system and remove the upper traverse. Ensure that the ball bearings do not fall out.
10. Remove the cover disc of the flange shaft at the barrier housing.
11. Pull out the flange shaft with the flange by rotating movements.

12. Insert the flange shaft with the flange from the other side by rotating movements. The flange shaft must protrude from the barrier housing by about 1,38 inch (35 mm) on the flange side.

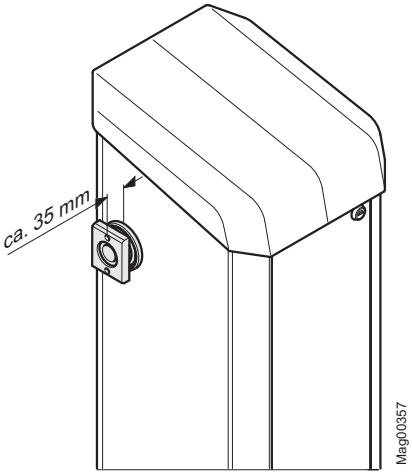

Fig. 27: Dimensions housing – flange

13. Tighten the two hexagon socket screws 10 AF of the clamping lever at the flange shaft. Observe that the flange for the barrier arm is vertically aligned.
    - Torque wrench with hexagon socket: 10 AF
    - Tightening torque: 88.508 lbf ft (120 Nm)
14. Apply cover disc for the flange shaft.
15. Install the spring traverse and hook the balancing springs in the lever system.

Assemble barrier arm

16. Assemble barrier arm with hexagon screw, washer and hexagon nut.

Align barrier arm, switch on power supply

17. Push the barrier into the top-most position. The clamping lever must be at the stop for the position "opening". If required, push straight through the upper tool bore with a tool to press the lever arm from the dead point. → See page 107, chapter 12.5.
18. Check vertical alignment of the barrier arm. If required, correct position of the flange and the barrier arm via the hexagon socket screws at the clamping lever.
    → See page 62, Fig. 26.
19. Switch on power supply.
20. Switch the "Service" switch on the control unit. The LED lights red. The display backlighting flashes.
21. Close the control unit with the middle right button at the control unit.
22. Check the horizontal alignment of the barrier arm with a spirit level and correct with the hexagon socket screws at the clamping lever if necessary.

23. Switch the "Service" switch on the control unit. The LED must light green.
24. Install the barrier housing door.
25. Attach and lock the barrier housing hood.

8.12 Check and set the balancing springs in the lever system

Danger of crushing, lever system

⚠ WARNING

Danger of crushing at opened barrier housing at the lever system!

The lever system in the barrier housing can cause serious crushing injuries!

– Balancing springs in the lever system must only be checked and adjusted by specialised personnel.
– Balancing springs must only be checked and adjusted with the power supply turned off
– Wear protective gloves if necessary.

The lever system has balancing springs that exactly balance the barrier arm weight. These balancing springs are pre-set in the factory. The precise setting must be performed after assembly of the barrier arm and before commissioning.

The lever force is determined not only by the spring tension but also by the number of springs used and the spring rate. MAGNETIC uses two spring types. Depending on application case, you will have to set the spring tension, remove the springs, use additional springs or use springs with a different spring rate.
→ Also see page 67, chapter 8.12.2.

In the "Power failure" menu, you can set the barrier behaviour in case of voltage failure. The settings in this menu do not influence the settings of the balancing springs. → See separate document "Description of control units MGC and MGC Pro for MHTM™ MicroDrive barriers".

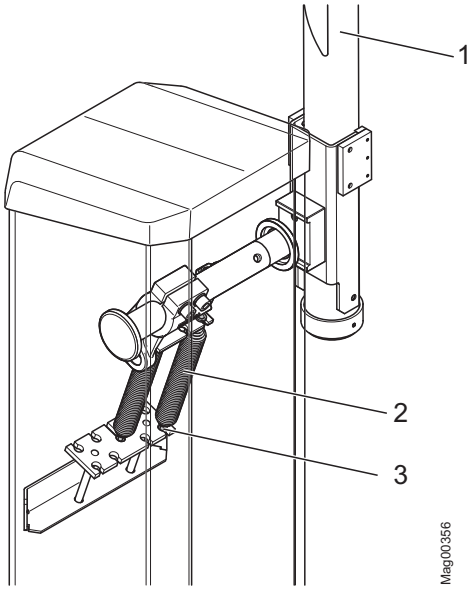

Fig. 28: Balancing springs in the lever system.

1 Barrier arm
2 Balancing spring
3 Screw with locknuts

8.12.1 Setting balancing springs

Check and adjust balancing springs

Check balancing springs with the motor warm from operation.

1. Secure barrier danger area e.g. with barrier tape.

WARNING!

Danger of crushing between barrier arm and barrier housing!

2. Switch off power supply. Ensure that the system is powered down. Secure against reactivation.
3. Place barrier arm in the 30° position manually. If required, push straight through the upper tool bore with a tool to press the lever arm from the dead point.
   → See page 107, chapter 12.5.
4. Let go of barrier arm.
   - If the barrier arm stays in the 30° position, the balancing springs are set correctly.
   - If the barrier arm does not stay in the 30° position, the balancing springs must be adjusted.

Adjust balancing springs:

5. Remove the barrier housing hood.
6. Remove the rear barrier housing door.
7. Adjust springs with a wrench via the screws with locknuts.
   - The barrier arm lowers: The spring force is too low.
   - The barrier arm pulls up: The spring force is too strong.
   - The barrier arm has come to rest when it stops at approx. 30°.
8. Install the barrier housing door.
9. Attach and lock the barrier housing hood.

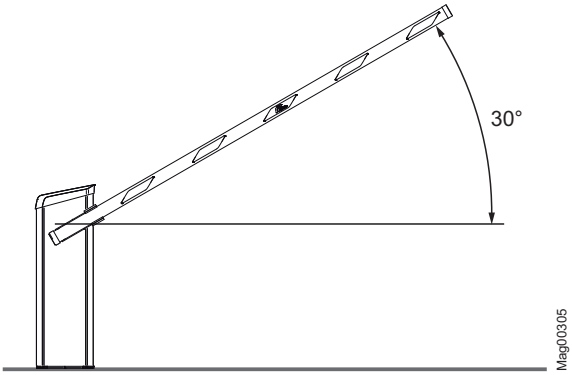

Fig. 29: Opening angle barrier arm 30°

8.12.2 Overview table balancing springs

NOTE!

The following overview tables "Balancing springs" do not take into consideration any attachment parts. For barrier arms with attachment parts, the required number of springs may deviate from the number of springs in the overview table.

Overview table balancing springs for barriers MicroDrive Toll and Toll HighSpeed

Line width	Number springs weak	Number springs strong
4.9 to 7.9 ft (1.5 to 2.4 m)	1	–
8.2 to 9.5 ft (2.5 to 2.9 m)	2	–
9.8 ft (3.0 m)	3	–

Table 8: Overview table balancing springs for barriers MicroDrive Toll and Toll HighSpeed

8.12.3 Equipment plan balancing springs

The balancing springs are aligned as follows for the barriers MAGNETIC MHTM™ MicroDrive Toll and Toll HighSpeed.

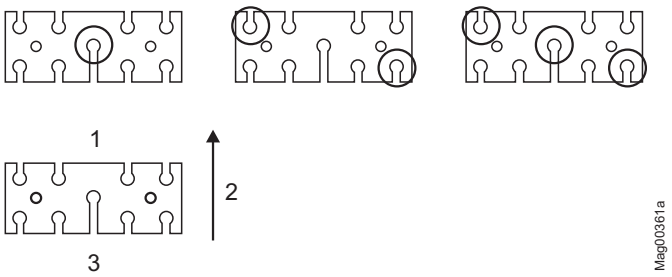

Fig. 30: Equipment plan balancing springs

1 Front
2 Barrier arm
3 Rear

8.13 Align barrier housing and light barrier post

Falling components

⚠ WARNING	
	Risk of injury from falling components! Falling components such as the barrier housing can cause severe injury! – When aligning the barrier housing and light barrier post, loosen the attachment screws only slightly. – Tighten the attachment screws again after alignment.

Alignment conditions for light barrier

Transmitter and receiver of the light barrier must be aligned with each other for an object to be securely detected. For final alignment, transmitter and receiver must be electrically connected.
→ See page 79, chapter 9.4.3.

1. Slightly loosen the barrier housing and post attachment screws.
2. Align barrier housing and post with each other.
3. Tighten the barrier housing and post attachment screws again.
4. Seal barrier housing with a silicon sealant according to page 55, Fig. 19.

8.14 Installing warning signs

Warning signs for the barrier

A minimum of two warning signs have be installed, one on each side of the barrier where easily visible. Two warning signs for the barrier are part of delivery.

Fig. 31: Apply prohibition signs

8.15 Check assembly and installation

The following points must be checked after assembly and installation of the barrier:

- Has the transport protection been removed?
- Are all foundation anchors firmly fixed?
- Are all screws firmly tightened
- Have all barrier housing covers been properly assembled?
- Are the warning signs installed?

9 Electrical connection

9.1 Safety

→ See also safety notes on page 18, chapter 2.6 "Occupational safety and special dangers".

Electric voltage – inadequate qualification

⚠ DANGER

Mortal danger by electric voltage!

Risk of injury in case of inadequate qualification!

– Only electrical specialists may carry out work on the electrical system.
  Electrical specialists are able, due to their technical training, knowledge and experiences as well as knowledge of the relevant standards and regulations, to execute tasks on electrical systems and to independently recognize possible hazards.
  In Germany, the electrical specialist must comply with the provisions of accident prevention regulation BGV A3 (e.g. master electrical fitter). Appropriate regulations apply in other countries. The regulations valid there must be observed.
  The installation is to be made by a professional installer according to NFPA 70 National Electrical Code and Local Code.

Electric voltage

⚠ DANGER

Mortal danger by electric voltage!

Touching live parts can be lethal.

Damage to the insulation or to individual components can be lethal.

- Switch off the power supply immediately in case of damage to the insulation and arrange repair.
- Only electrical specialists may carry out work on the electrical system.
- Switch off power supply and secure against reactivation before performing any work. Test for absence of voltage!
- Never bypass or deactivate fuses.
- When replacing fuses observe the correct amperage specification.
- Keep moisture and dust away from live parts. Moisture or dust may cause a short circuit. If the electrical connection is established during precipitation, e.g. rain or snow, penetration of moisture must be prevented by suitable measures, such as a protective cover.

General

⚠ WARNING

Danger by inappropriate installation!

Inappropriate installation can result in severe and lethal injuries.

- Only electrical specialists must perform any electrical installation tasks.
- Pay attention to tidiness and cleanness at the assembly site! Loosely stacked or lying around components and tools are accident sources.
- Tighten all screws correctly.

Hot surfaces

⚠ CAUTION

Danger of burns!

The motor surface may be hot. Touching this hot surface can lead to burns.

- Do not touch these hot surfaces.
- After switching off the power supply wait some minutes until the motor has cooled down.
- Wear protective gloves if necessary.

Electromagnetic interference

NOTICE	
	Electromagnetic interferences may cause malfunctions of the barrier or adjacent devices! The barrier is approved for industrial, residential, commercial and business use. Operation in other electro-magnetic environmental conditions may cause interferences or malfunctions. – Place control lines and mains cables into separate conduits – Use cables according to the electrical circuit plan. – Only install and apply additional parts approved by MAGNETIC. – The electrical and electronically additional parts must be EMC verified and must not exceed the indicated EMC limits.

Personal protective equipment

The following must be worn during all installation work:

- Work clothes
- Protective gloves
- Safety shoes
- Protective helmet.

9.2 Installing electrical protective devices

The safety installations that are required according to regional and local regulations must be provided by the customer. Usually these are:

- Ground fault circuit interrupter (GFCI)
- Circuit-breaker
- Appropriate listed 2-pole main switch.

9.3 Connecting the mains supply

Electrical voltage

⚠ DANGER

Danger to life from electric shock!

If the mains supply is not connected to the terminal clamps correctly, loosens from the terminal clamps and touches the housing or door, there is a direct danger to life from electric shock.

– Have work at the electrical system only performed by electricians.
– Connect mains supply according to the following description.
– Install electrical protective devices according to chapter 9.2, national and local codes.
– Perform proper grounding.

NOTE!

Cross-section of field wires used for mains line shall comply with requirements of National Electric Code (NFPA 70) and any applicable Local Codes.

DANGER!

Mortal danger by electric voltage!

1. Disconnect barrier system power supply. Ensure that the system is powered down. Secure against reactivation.

Strip-off cable and core insulation – preparation of the wiring

2. Strip-off mains supply and cores according to the following figure.

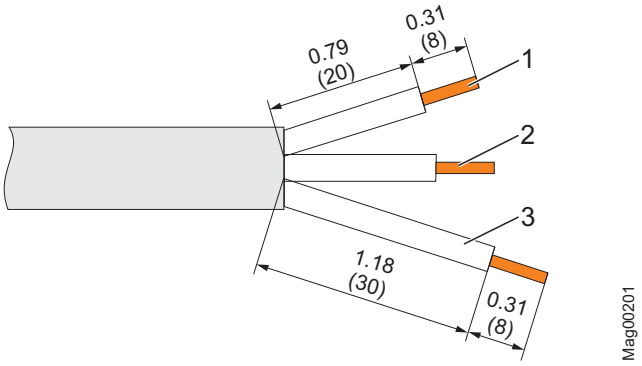

Fig. 32: Strip-off the mains supply
Dimensions in inch or feet are without parenthesis.
Dimensions in mm are in parenthesis

1 Phase
2 Neutral conductor
3 Ground conductor

Mains supply placement

3. Connect mains supply to the provided terminal clamps (X1: L/N/PE) of the barrier housing according to the following figures. → See also page 117, chapter 16.1.
   - Place mains supply properly in the barrier housing. The line must be wired so that no damage could occur due to moving parts.
   - Attach mains supply to the metal tabs via 2 cable ties.

Toll and Toll HighSpeed

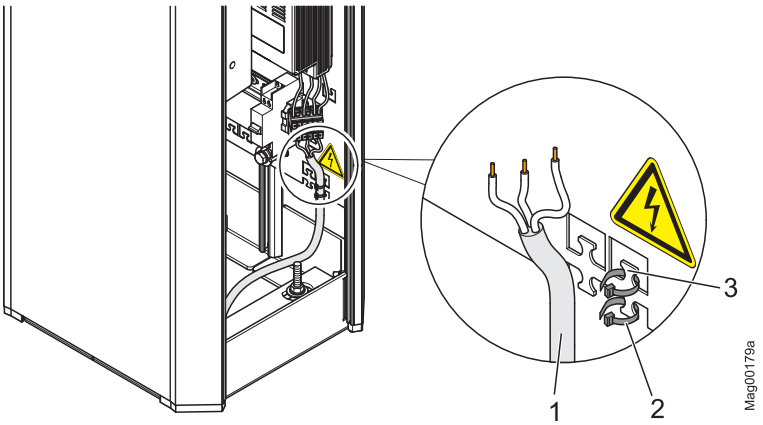

Fig. 33: Mains supply placement Toll and Toll HighSpeed

1 Mains supply
2 Cable tie
3 Cable tie metal tabs

Toll HighSpeed

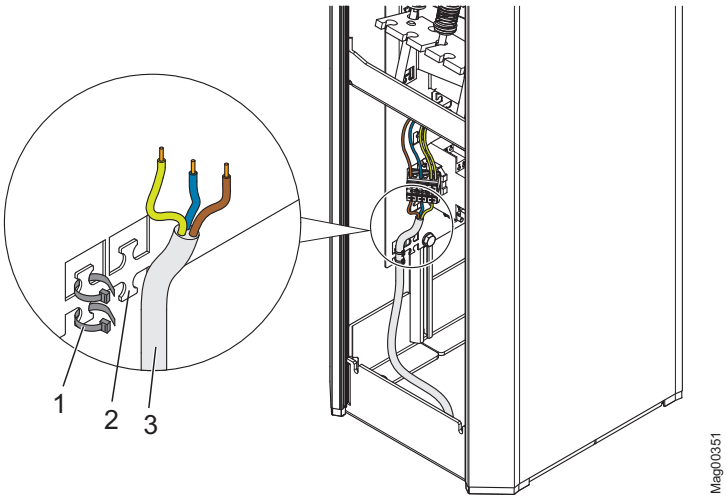

Fig. 34: Mains supply placement Toll HighSpeed

1 *Cable tie*
2 *Cable tie metal tabs*
3 *Mains supply*

Connecting mains supply – Toll and Toll Pro

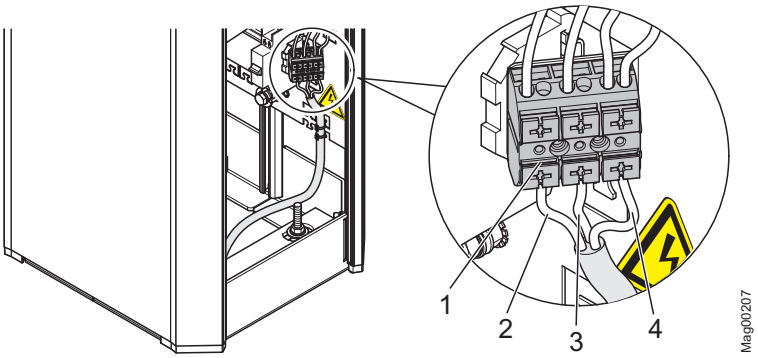

Fig. 35: Connecting the mains supply Toll and Toll Pro

1 *Terminal clamps for mains supply*
2 *Phase L*
3 *Neutral conductor N*
4 *Ground conductor PE*

Toll HighSpeed

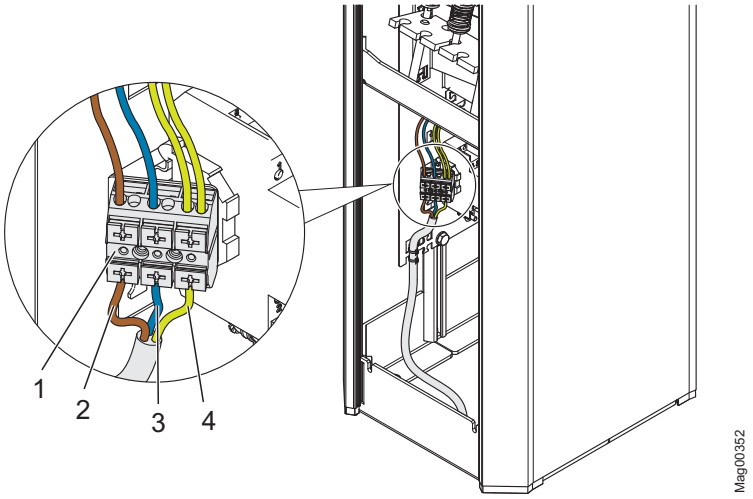

Fig. 36: Connecting the mains supply Toll HighSpeed

1 Terminal clamps for mains supply
2 Phase L
3 Zero conductor N
4 Earth conductor PE

9.4 Connect customer's control lines (signalling devices)

The following connections are available for control and feedback on customer's side:

- 8 Digital inputs for controlling the barrier.
- 4 Digital outputs to feed back information.
- 6 Relays outputs to feed back information. 3 Relays are normally-open contacts (NO) and 3 relays are change-over contacts.

DANGER!

Mortal danger by electric voltage!

1. Disconnect barrier system supply voltage. Ensure that there is no voltage applied. Secure against reactivation.

Connecting the control lines

2. Guide control lines into the connection space through the cable openings.
   - Place control lines properly in the barrier housing. The control lines must not get into moving components.
   - Attach control lines clamps and cable ties. The clamps can be removed from the rail by slight compression and relocated in the desired position. The cable ties can be attached to the metal tabs.
3. Connect control lines according to wiring diagram. Control lines must be wired so that no damage could occur due to moving parts.
   → See page 117, chapter 16.1 "Wiring diagrams".

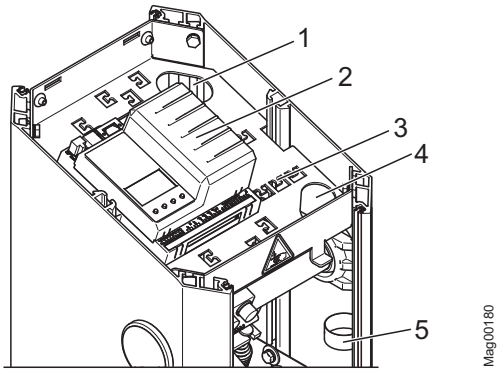

Fig. 37: Connecting the control lines

1 Cable opening rear
2 Control unit
3 Cable tie metal tabs
4 Cable opening front
5 Cable clamps

9.4.1 Connecting safety devices

As safety devices, you must connect safety loops or safety light barriers to the control unit. Safety loops must only be connected to monitor vehicles. Only MAGNETIC safety light barriers must be used.

If you connect a safety loop, the barrier closes only after the safety loop is clear. If you connect a safety light barrier, the barrier closes only after the safety light barrier is clear.

The danger area of 2 ft (610 mm) as defined in chapter 2.7 must be maintained at any time, even in case additional safety devices are installed.

9.4.2 Connecting safety loop

The safety loop is connected to the plug-in module "Detector 1 (A-B)", clamps A or clamps B.
→ See page 117, chapter 16.1 "Wiring diagrams".

The clamp function parameters can be set in the menu "Detector 1 (A-B)" with the parameters "Mode A" or "Mode B". → See separate document "Description of control units MGC and MGC Pro for MHTM™ MicroDrive barriers".

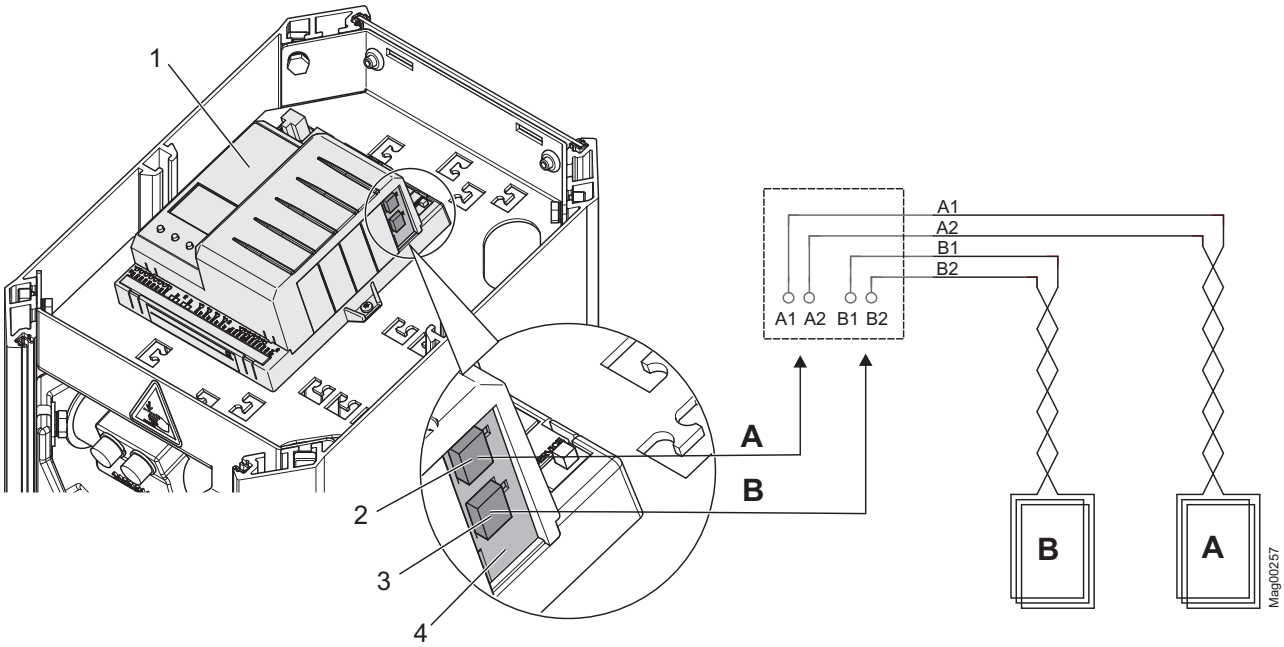

Fig. 38: Connecting safety loop

1 Control unit
2 Connection of induction loop A
3 Plug-in module "Detector 1 (A-B)"
4 Connection of induction loop B
A Induction loop A
B Induction loop B

NOTE!

If four induction loops must be supervised, you can connect another plug-in module with the "Detector" function into the control unit. This plug-in module registers as "Detector 2 (C-D)". To prevent mutual interference between the induction loops, we recommend using a plug-in module instead of an external detector.

9.4.3 Connect and test the safety light barriers

Connecting safety light barrier

Connect the transmitter and receiver connection lines of the safety light barriers to clamps X11 and X20.

By default, MAGNETIC installs a jumper between terminals X11 OUT and IN. When a safety light barrier is connected, the jumper must be removed.

→ See page 117, chapter 16.1 "Wiring diagrams".

Aligning the safety light barrier

The receiver is mounted at the post and the transmitter at the barrier housing. Alternatively, the receiver can also be installed to an opposite barrier housing.

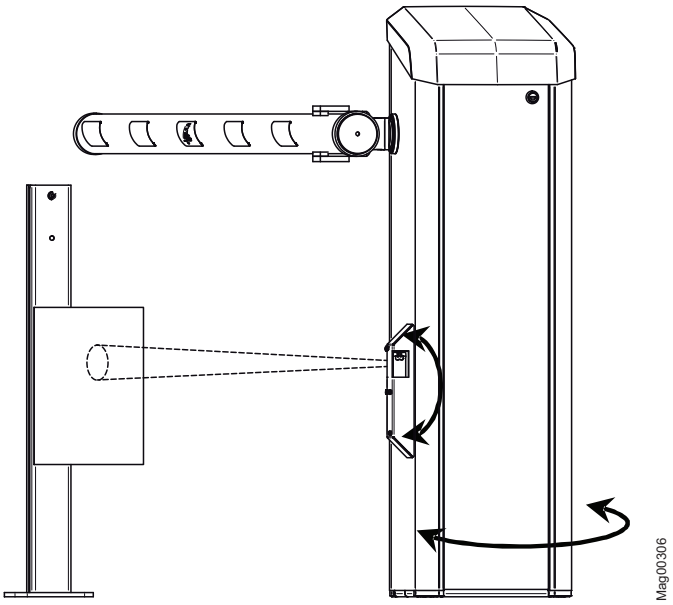

Fig. 39: Use reflective foil

1 Receiver, covered by reflective foil
2 Reflective foil
3 Transmitter

1. There must not be any objects between the transmitter and receiver. The light path must be free.
2. Switch on power supply.
3. The green LEDs at the transmitter and receiver must be lit.
4. Align receiver with transmitter. If required, hold the included reflective foil in front of the receiver as setting aid.
   The yellow LED at the receiver lights up when aligned correctly. Align receiver as follows:
   - Slightly loosen the post attachment screws.
   - Turn the post, until the yellow LED at the receiver is lit.
   - Tighten attachment screws of the post.
5. Keep reflective foil in the barrier housing.

Check safety light barrier function

Perform function test by holding an object into the light path between the transmitter and receiver.

The following items must be met:

- The yellow LED at the receiver must go out.
- The barrier cannot be closed.

9.4.4 Connecting emergency opening contacts

Fire-fighter switch, emergency opening contacts, etc. are connected to the "Open high priority" input. When the signal is applied to this input, the barrier opens. While the signal is present, the barrier cannot be closed.

→ See page 117, chapter 16.1 "Wiring diagrams".

9.4.5 Digital inputs

Technical data

→ See page 30, chapter 4.2.

Freely parameterisable and firmly assigned input functions

NOTE!

For barriers with a control unit MGC-Pro the digital input functions can be freely parameterised. The control unit MGC-Pro is installed in the following barrier types:

- *Toll Pro*
- *Toll HighSpeed with MGC Pro → See page 27, chapter 3.2, Option 20*

For the remaining barrier types the control unit MGC is installed. Here the inputs are firmly assigned.

→ For input parameterisation, see separate document "Description of control units MGC and MGC Pro for MHTM™ MicroDrive barriers".

Factory setting

Clamp	Description	Function
IN1	Input 1	Open low priority
IN2	Input 2	Open low priority
IN3	Input 3	Opening with vend count
IN4	Input 4	Open high priority
IN5	Input 5	External opening loop exit
IN6	Input 6	Close
IN7	Input 7	Close
IN8	Input 8	Boom contact input

Table 9: Factory settings "Digital inputs"

9.4.6 Digital outputs and output relays

Technical data

→See page 30, chapter 4.2.

Freely parameterisable and firmly assigned output functions

NOTE!

For barriers with a control unit MGC-Pro the digital output and the output relays functions can be freely parameterised. The control unit MGC-Pro is installed in the following barrier types:

- *Toll Pro*
- *Toll HighSpeed with MGC Pro → See page 27, chapter 3.2, Option 20*

For the remaining barrier types the control unit MGC is installed. Here the outputs are firmly assigned.

→ For output parameterisation, see separate document "Description of control units MGC and MGC Pro for MHTM™ MicroDrive barriers".

Factory setting

Clamp	Description	Function
DO1	Digital output 1	Boom locking
DO2	Digital output 2	Pulse after passage
DO3	Digital output 3	Signal light A
DO4	Digital output 4	Signal light B
NO1	Relay 1	Open
NO2	Relay 2	Closed
NO3	Relay 3	Error
NO4/NC4	Relay 4	Loop active A
NO5/NC5	Relay 5	Loop active B
NO6/NC6	Relay 6	Signal light C

Table 10: Factory settings "Digital outputs" and "Relay outputs"

9.5 Checking the electrical connection

The following points have to be checked after the electrical installation of the barrier:

- Are the following electrical protective devices installed: 2-pole main switch, circuit breaker and ground fault circuit interrupter?
- Is the power cable connected to the terminal in compliance with chapter 9.3?
- Are the induction loops connected according to the wiring diagram?
- Are the safety light barriers connected according to the wiring diagram?
- Are the control lines connected according to wiring diagram?
- Have all barrier housing covers been properly assembled?

10 Start-up and operation

10.1 Safety

→ See also safety notes on page 18, chapter 2.6 "Occupational safety and special dangers".

General

⚠ WARNING

Danger by inappropriate start-up and operation!

Inappropriate start-up and operation can cause severe or lethal injuries.

– Commissioning and operation must be performed by specialists or electronics specialists.
– Always observe the radius of action of the barrier arm.
– Prior to start of works ensure that all housing covers are correctly mounted.

Wind forces over 10 Beaufort

⚠ WARNING

Risk of injury from breaking off barrier arms in case of high wind speeds!

In case of wind speeds exceeding 10 Beaufort, the barrier arm may break off from the wind load and cause severe injuries.

Therefore observe in case of storm warnings above 10 Beaufort:

– Disassemble barrier arm or secure it with suitable measures.
– Stop operating the barrier system.

Personal protective equipment

The following must be worn during start-up:

- Work clothes
- Protective gloves
- Safety shoes
- Protective helmet.

10.2 Commissioning

Check before to initial start-up

The following inspections must be performed prior to initial start-up:

- Checks whether the transport protection was removed.
- Check electrical connections.
- Check barrier arm position.
- Check balancing springs in the lever system and adjust if required.

Inspection during the first start-up

The following inspections must be performed prior to first start-up:

- Check programme mode. → See separate document "Description of control units MGC and MGC Pro for MHTM™ MicroDrive barriers", chapter "Select programme mode".
- Check parameterisation in connection with wiring.
- Testing and setting the operating frequency of the induction loops. → See separate document "Description of control units MGC and MGC Pro for MHTM™ MicroDrive barriers", chapter "Detector 1 (A-B)".
- Check the function of the barrier, induction loops, and the signalling devices.

10.3 Switching on and off the barrier

NOTICE

A too early mains voltage power up after a shut down can result in damage of the equipment!

– Wait for at least 10 seconds after shutting off the mains voltage before you switch the mains voltage on again.

Toll and Toll Pro

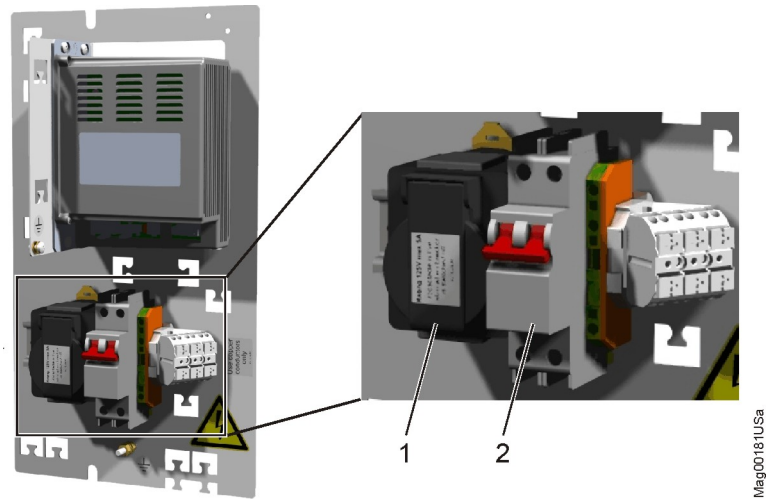

Fig. 40: Switching on and off the barrier

1 Service socket (WARNING: Service socket is live, also when mains switch is switched off.)
2 Double pole mains switch

Toll HighSpeed

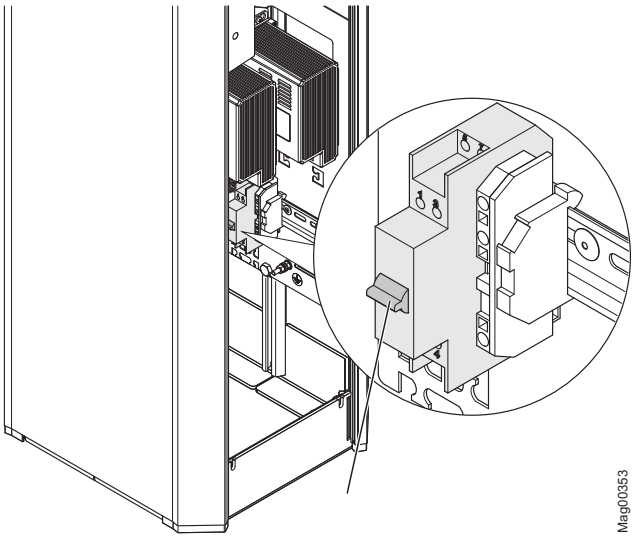

Fig. 41: Switching on and off barrier Toll HighSpeed

1 2-pole mains switch

Switching on

1. Remove the barrier housing hood.
2. Remove the barrier housing door.
3. Switch on the barrier via the double pole mains switch.
4. Depending on the settings in the "Start-up behaviour" menu, the barrier arm slowly moves into the top end position (homing run) or stops.
5. Mount the door.
6. Attach and lock the hood.

Switching off

1. Remove the barrier housing hood.
2. Remove the barrier housing door.
3. Switch off the barrier via the double pole mains switch.
4. Depending on the settings of the lever system's balancing spring and the settings in the menu "Power failure", the barrier arm opens or closes. → See separate document "Description of control units MGC and MGC Pro for MHTM™ MicroDrive barriers", chapter "Power failure".
5. Mount the door.
6. Attach and lock the hood.

10.4 Opening and closing the barrier manually

You can only open and close the barrier manually in the "Service" mode.

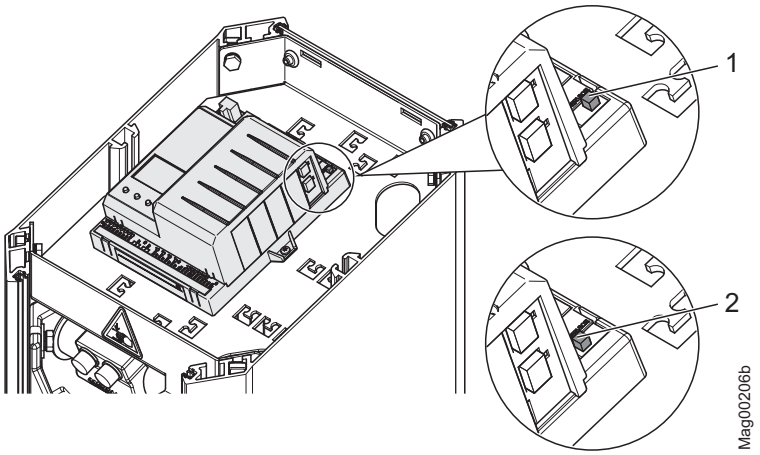

Fig. 42: Service switch

1 Mode "Service" on
2 Mode "Service" off

1. Switch the "Service" switch for the "Service" mode. The LED lights red. The display backlighting flashes.
2. Perform one of the following functions:
   - Push middle left button : Manually open the barrier.
   - Push middle right button : Manually close the barrier.
3. Switch "Service" switch. The LED must light green.

NOTE!

For reasons of safety, the first barrier arm motion after switching between programme mode and service mode is performed at slow speed.

10.5 Putting the barrier temporarily out of operation

High wind speeds

⚠ WARNING

Risk of injury from barrier arm in case of high wind speeds!

The barrier arm is no longer securely locked with the mains voltage off. At high wind speeds, the barrier arm can be pressed from its end position. The moving barrier arm can severely injure a person.

– Keep supplying the barrier with mains voltage.
– Remove the barrier arm if necessary.

NOTICE

Possible damage to the equipment by condensed water when mains voltage is switched off!

– Keep supplying the barrier with mains voltage.

If the barrier is put out of operation for a longer period, proceed as follows:

1. Switch off barrier. → See page 86, chapter 10.3.
2. Remove the barrier arm if necessary. → See page 110, chapter 12.7.
3. Protect the barrier from corrosion and contamination.
4. Switch on barrier. → See page 86, chapter 10.3.

11 Cleaning and Maintenance

11.1 Safety

→ See also safety notes on page 18, chapter 2.6 "Occupational safety and special dangers".

General

⚠ WARNING

Danger by inappropriate cleaning and maintenance!

Inappropriate cleaning and maintenance can cause severe or lethal injuries.

- All maintenance work must be performed by specialists or electrical specialists.
- Any possibly present ground fault circuit interrupter (GFCI) must only be inspected by an electrician.
- Prior to work, ensure that there is sufficient assembly space.
- Pay attention to tidiness and cleanness at the assembly site! Loosely stacked or lying around components and tools are accident sources.
- After completion of maintenance work, ensure that all covers are correctly mounted.
- Wear protective helmet.

Personal protective equipment

The following must be worn during maintenance work:

- Work clothes
- Protective gloves
- Safety shoes
- Protective helmet.

Maintenance book

We recommend keeping a maintenance book to properly document all maintenance work.

11.2 Cleaning

The cleaning interval essentially depends on the environmental conditions and the climate.

Aggressive cleaning aids and substances

NOTICE

Unit damage possible!

Aggressive detergents and consumables may damage or destroy components, electric cables, or the coating of the barrier.

– Do not use cleaning agents with aggressive ingredients.

11.3 Cleaning from the outside

Clean the barrier housing and the barrier arm at regular intervals.

11.4 Clean barrier housing from the inside

Carrying out cleaning work:

1. Switch off power supply and secure against restarting.

DANGER!

Mortal danger by electric voltage!

- Keep moisture and dust away from live parts. Moisture or dust may cause a short circuit.
- Never clean the barrier housing and barrier arm with vapour or pressure-jet cleaners.

2. Remove contamination from the outside of the barrier housing properly using water with washing-up liquid and a square of cloth. Do not bring control units and electrical components in contact with moisture.
3. Remove dust inside the housing with a vacuum cleaner.
4. After cleaning work, check that all previously opened covers are closed again and that all safety equipment functions correctly.

11.5 Maintenance schedule

The following describes the maintenance work that is necessary for optimal, trouble-free operation. Maintenance intervals must be observed.

If increased wear of individual components or functional groups is revealed during regular inspections, the operator must reduce the required maintenance intervals on the basis of the actual signs of wear.

In case of queries regarding the maintenance work and intervals: contact the manufacturer (for service address, refer to page 2).

Interval	Maintenance work	To be carried out by
Monthly	Visual inspection of the housing, inside and out, for damage and corrosion. Clean the housing and repair paint damage as necessary. Remove corrosion damage.	Specialist
	Visual inspection of foundation anchors, attachment profiles and mounting material for corrosion. Remove corrosion damage.	Specialist
	Visual inspection of the barrier arm for damage and corrosion. Clean the barrier arm and repair paint damage as necessary. Remove corrosion damage.	Specialist
	Visual inspection of additional parts, such as the pendulum support, for damage and corrosion. Clean additional parts and repair paint damage. Remove corrosion damage.	Specialist
	Where they exist, inspect lenses and mirrors of the light barriers.	Specialist
Every 6 months	Perform all monthly maintenance work.	Specialist
	Check function of the ground fault circuit interrupter (GFCI)	Electrical specialist
	Check the barrier housing fastening screws for tight fit. If required, tighten the screws.	Specialist
	Check the barrier arm and flange fastening screws for tight fit. If required, tighten the screws.	Specialist
	Check the screws of the system parts, such as pendulum support, for tight fit. If required, tighten the screws.	Specialist

Interval	Maintenance work	To be carried out by
Every 12 months	Perform all monthly and semi-annual maintenance work.	Electrician / specialist
	Check the barrier's mechanics.	MHTM MicroDrive service specialist
	Check the spring setting of the lever system.	
	Check barrier arm position.	
	Visual inspection of the induction loops and the carriageway in the area of the loops for damage.	
	Check the induction loops' function. → See separate document "Description of control units MGC and MGC Pro for MHTM™ MicroDrive barriers", chapter "Detector 1 (A-B)".	
	Check the induction loops. Measure the contact resistance, insulation resistance, and inductivity of the induction loops. → See page 51.	
	Where they exist, check the function of additional safety equipment, such as light barriers.	
	Check the barrier's function.	
	Check the barrier's locking in the position "Closed".	
	Check the advanced warning on barriers with the active function "Traffic lights lead".	
	Check electric cables for damages.	
	Check if all electrical connections are firm.	
	Check signs and labels for completeness and legibility.	

Table 11: Maintenance schedule

12 Malfunctions

This chapter describes possible causes of malfunctions and trouble shooting tasks.

Contact your dealer in case of malfunctions that cannot be repaired by means of the following information. Procure spare parts from your dealer or directly from the manufacturer. For the address, see invoice, delivery note or the reverse of these instructions.

12.1 Safety

→ See also safety notes on page 18, chapter 2.6 "Occupational safety and special dangers".

General

⚠ WARNING

Danger of injury from inappropriate troubleshooting!

Inappropriate troubleshooting can cause severe or lethal injuries.

- All troubleshooting work must be performed by specialists or electronics specialists.
- Observe possible movements of the barrier arm. A defective control unit may lead to inadvertent movement of the barrier arm.
- Prior to work, ensure that there is sufficient assembly space.
- Pay attention to tidiness and cleanness at the assembly site! Loosely stacked or lying around components and tools are accident sources.
- Deactivate the barrier if any components are damaged, e.g. the barrier arm.
- After completion of troubleshooting, ensure that all covers are correctly mounted.

Danger of injury after lightning strike

⚠ WARNING

Danger of injury from total outage or barrier malfunction after lightning has hit the barrier!

If the barrier is struck by lightening, this may lead to total outage or malfunction of the barrier. The malfunction may cause unexpected barrier behaviour and thus lead to serious injury!

– If the barrier is struck by lightening, have an electrician check the barrier for damage and proper function. Repair barrier if required.
– Observe possible movements of the barrier arm. Defective control may lead to inadvertent movement of the barrier arm.

12.2 Malfunction table – barrier malfunctions

→ For requirements to the MHTM MicroDrive service specialist, see page 17, chapter 2.4.1.

Malfunction: Display is difficult or impossible to read.

Possible cause	Corrective action	Removal by
Display contact set too light or dark.	Correct display contact. → See separate document "Description of control units MGC and MGC Pro for MHTM™ MicroDrive barriers", chapter "Setting display contrast".	Electrical specialist

Malfunction: Barrier out of operation. The message "Safety device missing" appears on the display.

Possible cause	Corrective action	Removal by
No safety loop is connected to the plug-in module "Detector" and no safety light barrier to clamp X11 and X20.	Connect either safety loop or safety light barrier. → See page 117, chapter 16.1.	Electrical specialist
Safety device defective	Replace safety device	Electrical specialist

Malfunction: Barrier does not open.

Possible cause	Corrective action	Removal by
Power supply is not connected	■ Switch on power supply. ■ Check power supply.	Electrical specialist
Error present. The corresponding error message is displayed.	Depending on error message, check components, wiring, etc.	MHTM MicroDrive service specialist
Power supply is present. Control unit display does not light up.	Control unit defective. Replace the control unit. Contact service.	MHTM MicroDrive service specialist
Closing signal is active.	Remove closing signal	Electrical specialist
Too high trigger sensitivity set for the loop.	Check the response sensitivity of the loop and adjust if necessary.	MHTM MicroDrive service specialist

Malfunction: Barrier does not open completely.

Possible cause	Corrective action	Removal by
Spring tension in the balancing springs of the lever system set too weakly for the barrier arm weight.	Adjust balancing springs. → See page 64, chapter 8.12.	MHTM MicroDrive service specialist

Malfunction: Barrier does not close. The message "Waiting for release" appears on the display.

Possible cause	Corrective action	Removal by
The message appears after the power supply is switched on, after voltage returns and after reset.	The release signal can be given by an external closing signal or by pushing the left operating button at the control unit. → See separate document "Description of control units MGC and MGC Pro for MHTM™ MicroDrive barriers", chapter "Start-up settings".	Operator

Malfunction: Barrier does not close. The message "Waiting for passage" appears on the display.

Possible cause	Corrective action	Removal by
The message appears after the power supply is switched on, after voltage returns and after reset.	■ The barrier closes once a vehicle passes. → See separate document "Description of control units MGC and MGC Pro for MHTM™ MicroDrive barriers", chapter "Start-up settings". ■ Confirm message with the left button at the control unit.	Operator

Malfunction: Barrier does not close. The display shows: ?

Possible cause	Corrective action	Removal by
Loop not connected.	Connect loop	MHTM MicroDrive service specialist
Detector mode incorrectly parameterised.	Check parameterisation of the detector module and correct if required. → See separate document "Description of control units MGC and MGC Pro for MHTM™ MicroDrive barriers", chapter "Detector 1 (A-B)".	MHTM MicroDrive service specialist
Loop defective.	Replace loop.	MHTM MicroDrive service specialist
Transfer resistance at the terminals	Cut connecting leads, strip and connect them again without end sleeves.	MHTM MicroDrive service specialist

Malfunction: Barrier does not close.

Possible cause	Corrective action	Removal by
Opening command is active.	Cancel the opening command.	Electrical specialist
Induction loop reports engaged, although no vehicles are present.	■ Check and if necessary adjust loop frequencies. ■ Measure loops. Insulation resistance: > 1 Mohm contact resistance: 0.8 to 2.5 ohm Replace loop if the measured values differ from the specified values.	MHTM MicroDrive service specialist
Wire bridge between terminals X11 IN and OUT missing.	If no safety light barrier is connected, a wire bridge must be installed between the clamps X11 OUT and IN. → See page 117, chapter 16.1.	MHTM MicroDrive service specialist
Message "Boom contact active": At the "Boom contact" input, boom ejection was detected.	Barrier with SwingAway and automatic return: Wait for delay.	Operator
	Barrier with SwingAway and manual return: Put barrier arm in the original position manually.	Operator
	Barrier without Swing Away: Replace the barrier arm	MHTM MicroDrive service specialist

Malfunction: Barrier does not close immediately after through traffic, but only after the hold-open time.

Possible cause	Corrective action	Removal by
Opening signal is active for too long.	Shorten opening signal to max. 1 second.	Electrical specialist
Safety loop does not respond.	Check the response sensitivity of the safety loop. Adjust setting if necessary.	MHTM MicroDrive service specialist

Malfunction: Barrier does not close completely.

Possible cause	Corrective action	Removal by
Spring tension in the balancing springs of the lever system set too strongly for the barrier arm weight.	Adjust balancing springs. → See page 64, chapter 8.12.	MHTM MicroDrive service specialist
Impact was recognised.	Wait several seconds, barrier closes if no obstacle is below the barrier arm anymore.	–

Malfunction: Barrier closes, although a vehicle is standing on the safety loop.

Possible cause	Corrective action	Removal by
Option "monitoring" for the parameters "Mode A" or "Mode B" not selected in the menu "Loop detector 1 (A-B)".	Select option "Monitoring".	MHTM MicroDrive service specialist
Cut off angle incorrectly parameterised.	Check and adjust the cut off angle.	MHTM MicroDrive service specialist
Too low trigger sensitivity set for the loop.	Check the response sensitivity of the loop and adjust if necessary.	MHTM MicroDrive service specialist
Unsuitable loop geometry installed.	Install an appropriate loop geometry.	MHTM MicroDrive service specialist
Loop fault due to external loop detectors or other barriers in the proximity.	Check the operating frequency of the loops and adjust if necessary	MHTM MicroDrive service specialist
Safety light barrier connected incorrectly or defective.	Check safety light barrier function.	MHTM MicroDrive service specialist
User misbehaviour e.g. driving into closing barrier, or following behind another vehicle.	Retrofit signal light, such as red/green signal light and parameterise lead time.	MHTM MicroDrive service specialist
	Upgrade signs.	Operator

Malfunction: Menu items of the plug-in modules, such as "Detector 1 (A-B) are displayed but cannot be operated.

Possible cause	Corrective action	Removal by
The SW-version of the plug-in module is lower than 0.10. The SW version is displayed in the respective menu in the submenu "Information".	■ Use plug-in module with a SW version 0.10 and up. ■ Perform update to SW-Version 0.12.	MHTM MicroDrive service specialist

Malfunction: The menu language of the plug-in module is English although another language was set.

Possible cause	Corrective action	Removal by
The SW-version of the plug-in module is 01.10. The SW version is displayed in the respective menu in the submenu "Information".	Perform update to SW-Version 0.12.	MHTM MicroDrive service specialist

12.3 Warning and interference messages on the display

The control unit differentiates between events, warnings and errors. The corresponding message is displayed.

Event messages "INFO"

Event messages inform about events such as "switching to battery operation". The barrier continues to run normally. Event messages do not influence the outputs of the control unit.

Warning messages "WARNING"

Faults that could be reset by the control unit are displayed as warnings. Operation of the barrier is not or only briefly impaired.

If the function "Warning" has been chosen for an output, this output is deactivated at pending warnings (fail safe).

Error messages "ERROR"

Faults that cannot be reset by the control unit are displayed as errors. The barrier is shut down.

If the function "Error" has been chosen for an output, this output is deactivated at pending warnings (fail safe).

To take the barrier into operation again, the fault must be removed by an MHTM MicroDrive service specialist and a reset according to chapter 12.4 must be performed.
→ For requirements to the MHTM MicroDrive service specialist, see page 17, chapter 2.4.

NOTE!

With some messages, the control unit tries to reset the cause of the message. If the attempt was successful, the message is displayed as WARNING. If the attempt failed, the message is displayed as ERROR.

12.3.1 Event, warning and error messages – Logic control (Control unit)

Number	Description	Possible cause	Corrective action
FF01 WARNING	Error barrier mechanics	The first closing motion could not be performed completely.	■ If required, remove obstacle below the barrier arm. ■ Check barrier mechanics. ■ Check the spring setting of the balancing springs.
FF02 WARNING	Detector monitoring signal	Communication between logic control and detector module impaired.	■ Perform reset. → See page 106, chapter 12.4. ■ Check plug contacts. ■ Clean plug contacts with spirit. Observe ESD provisions. ■ Replace the control unit.
FF03 ERROR	Monitoring device is missing	No monitoring loop is connected to the detector module and no safety light barrier to the clamps X11 and X20.	Connect either the safety loop or safety light barrier. → See page 117, chapter 16.1.
		Safety device defective	Replace safety device.
		Sensitivity settings in the "Detector" menu too low. Not all vehicles are recognised.	Change sensitivity. → See separate document "Description of control units MGC and MGC Pro for MHTM™ MicroDrive barriers", chapter "Detector 1 (A-B)".
FF04 ERROR	Barrier too fast	Spring tension in the balancing springs of the lever system set too weakly for the barrier arm weight.	■ Adjust balancing springs. → See page 64, chapter 8.12. ■ Contact service if required.

Number	Description	Possible cause	Corrective action
FF05 WARNING	Book contact / Swing-sway active	At the "Boom contact" input, boom ejection was detected.	■ Barrier with SwingAway and automatic return: Wait for delay. ■ Barrier with SwingAway and automatic return: Put barrier arm in the original position manually. ■ Barriers without Swing Away or FLVB02 flange: Replace the barrier arm ■ If required, choose the option "Off" in the "Boom contact settings" menu. ■ Verify cables.
FF06 WARNING	Vandalism	The barrier arm was either lifted from the lower end position or stopped when closing.	In the closed position, check that the lever system latches.
FF07 INFO	Battery Backup active	The barrier is supplied with voltage via the battery backup.	Check and restore power supply.
FF08 INFO	Mains operation active again after battery mode	The barrier is supplied with mains voltage again.	–
FF09 INFO	Reduced opening angle	In some barrier types, the opening angle can be mechanically limited with attachments. The control unit performs the required parameter adjustments automatically.	Message appears although the opening angle has not been limited mechanically. ■ Remove obstacle to ensure that the lever system can lock in both end positions.
FF30 WARNING	Impact detection	Impact was recognised by the input "external impact contact".	■ Wait for a few seconds. The barrier closes if no obstacle is below the barrier arm anymore. ■ When no obstacle is present below the barrier arm, check input, e.g. contact strip.
3120 ERROR	Mains voltage fluctuations	Short-term mains outage was recognised	■ Check supply voltage/mains quality
5530 ERROR	EEPROM checksum	Check sum of the parameter incorrect	■ Re-set parameters to factory defaults. → See separate document "Description of control units MGC and MGC Pro for MHTM™ MicroDrive barriers", chapter "Factory settings". ■ Contact service if required.

Number	Description	Possible cause	Corrective action
6000 ERROR	Module update error	A firmware update was not performed correctly.	■ Restart the control unit ■ If the error continues to be present, perform the update again via the service module.
6102 ERROR	Software error system bus	Within the control, an error is pending in communication.	■ Check FW versions of all plug-in modules. If required, perform update via service module. ■ If all FW versions are up to date, contact service.
6105 ERROR	Error during homing	The barrier could not perform any reference run.	■ Check motor communication. ■ Check mechanics. ■ Perform reset. → See page 106, chapter 12.4.
8130 WARNING	Note monitoring	Communication with a plug module was interrupted.	■ Check if all plugged modules are listed in the main menu. ■ Perform reset. → See page 106, chapter 12.4. ■ Contact service if required.

Table 12: Event, warning and error messages – logic control (control unit)

12.3.2 Event, warning and error messages – Motor GW

Number	Description	Possible cause	Corrective action
2220 WARNING	Overcurrent	Overcurrent was recognised	■ Warning may appear in connection with impact. ■ If no impact took place, check the cables. ■ Contact service if required.
3211 WARNING	Overvoltage	Overvoltage was recognised	■ Warning may appear in connection with impact. ■ If no impact took place, check the cables. ■ Contact service if required.

Number	Description	Possible cause	Corrective action
3221 WARNING	Undervoltage	Undervoltage was recognised	The message may occur at an impact below the cut off angle. ■ Check if an impact has occurred below the cut off angle.
			There is no impact. ■ Check wiring. ■ Check if there is an overload of the 24 V DC-supply. Supply additional consumer via separate mains unit. ■ Check the balancing spring settings. If required, remove heavy attachments from the barrier arm. ■ If required, contact Service.
4210 WARNING	Overtemperature	A high temperature was recognised.	■ Check motor temperature via display. The temperature must be below 100 °C. → See separate document "Description of control units MGC and MGC Pro for MHTM™ MicroDrive barriers", chapter "Motor GW". ■ Contact service if required.
4220 WARNING	Derating error	Motor power intake is reduced to avoid further temperature increase.	■ Remove impermissible attachments ■ Check the spring setting of the balancing springs. ■ Reduce speed of the barrier arm. ■ Contact service if required.

Number	Description	Possible cause	Corrective action
FF30 WARNING	Impact detection	Current increase and speed deviation	■ Check safety devices. ■ Adjust menu "Cut off angle" → See separate document "Description of control units MGC and MGC Pro for MHTM™ MicroDrive barriers", chapter "Cut off angle". ■ Check setting of the parameter "Sensitivity" and adjust if required. → See separate document "Description of control units MGC and MGC Pro for MHTM™ MicroDrive barriers", chapter "Impact settings". ■ If there was no impact on an obstacle/vehicle, check the spring settings of the balancing springs and mechanics.
7510 ERROR	Motor communications error	Communication between motor and control impaired or interrupted	■ Verify cables ■ Contact service if required.
FF32 ERROR	HW-Enable-Test failed	–	Contact service.
FF33 ERROR	LS-Test failed	Safety light barrier test failed	Check light barrier and light barrier connection.
FF36 WARNING	Motor reset Homing is performed automatically.	A short overload or drop of the voltage supply of the motor controller has triggered a motor reset.	Check the balancing spring settings. If required, remove heavy attachments from the barrier boom.
FF37 ERROR	Motor update failed	An error occurred when updating the software	■ Perform reset. → See page 106, chapter 12.4. ■ Contact service if required.
FF3A INFO	Motor update performed	This message is for information only.	–

Table 13: Event, warning and error messages – Motor GW

12.3.3 Event, warning and error messages – Detector

The warning messages "FF4B" and "FF4C" are also reported through the output function "Error".

Number	Description	Possible cause	Corrective action
FF4A ERROR	Hardware error	Internal HW function test failed	■ Perform reset. → See page 106, chapter 12.4. ■ Contact service if required.
FF4B WARNING	Loop error A or C	Short circuit or idle loop A or C	■ Remove loop error and perform adjustment. ■ If no loop is connected, select the option "Inactive" in the menu "Detector".
FF4C WARNING	Loop error B or D	Short circuit or idle loop B or D	■ Remove loop error and perform adjustment. ■ If no loop is connected, select the option "Inactive" in the menu "Detector".

Table 14: Event, warning and error messages – Detector

12.3.4 Event, warning and error messages – All modules

Number	Description	Possible cause	Corrective action
6010 WARNING	Watchdog reset	SW error	Contact service if required.
8110 WARNING	Bus fault	Warning	Contact service if required.
8120 WARNING	Bus HW fault	Warning	■ Check DIP switch next to service interface (position ON) ■ Remove devices at service interface if required.

Table 15: Event, warning and error messages – All modules

12.4 Reset the barrier

Control unit reset is performed as follows:

- Switch of power supply and switch it on again after 10 seconds.

or

- Press the two middle operating buttons on the control unit display for 5 seconds.

NOTICE	
	Damage to the unit by too-short switching intervals of the mains voltage! – To avoid damage to the equipment the power must remain shut off for at least 10 seconds.

12.5 Closing or opening the barrier arm in case of power failure

In case of power failure, the barrier arm may be in the lower or upper dead point. I.e. the barrier arm can no longer be easily moved manually. In this case, proceed as follows:

1. Remove the barrier housing hood.
2. Remove the barrier housing door.
3. Press a tool straight into appropriate tool bore. The lever arm is pressed from the dead point
   - Upper tool bore for opening the barrier.
   - Lower tool bore for closing the barrier.
4. Mount the door if applicable.
5. Attach and lock the hood if applicable.

Toll and Toll Pro

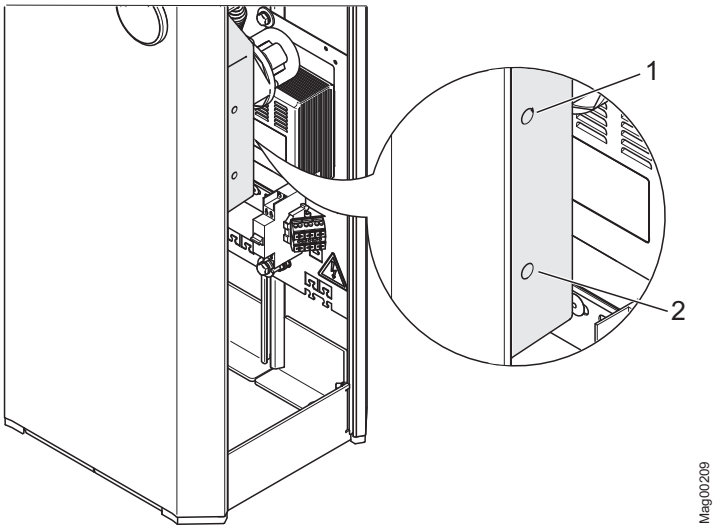

Fig. 43: Top and bottom tool bore Toll and Toll Pro

1 Upper tool bore for opening the barrier
2 Lower tool bore for closing the barrier

Toll HighSpeed

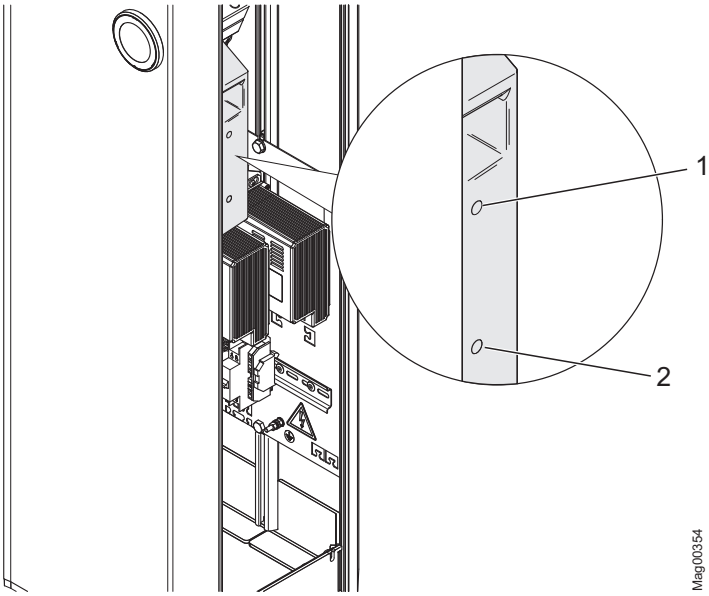

Fig. 44: Top and bottom tool bore Toll HighSpeed

1 Upper tool bore for opening the barrier
2 Lower tool bore for closing the barrier

12.6 Safety

→ See also safety notes on page 18, chapter 2.6 "Occupational safety and special dangers".

General

⚠ WARNING

Danger by inappropriate repair!

Inappropriate repair can cause severe or lethal injuries.

- All repair work must only be performed by authorised MHTM service specialists.
- Prior to work, ensure that there is sufficient assembly space.
- Pay attention to tidiness and cleanness at the assembly site! Loosely stacked or lying around components and tools are accident sources.
- Only use original spare parts or spare parts approved of by MAGNETIC. Procure spare parts from your dealer or directly from the manufacturer. For the address, see invoice, delivery note or the reverse of these instructions.
- After completion of repair work, ensure that all covers are correctly mounted.

Switching off power supply

⚠ WARNING

Risk of injury and damage by switching off power supply of the barrier!

In case the power supply is switched off and the barrier arm is not mounted, the drive unit and the lever system may be damaged or cause severe or lethal injuries.

- Only switch off power supply when either the barrier arm is mounted or the balancing springs in the lever system are relaxed. If the balancing springs are relaxed, the flange is vertical.

Personal protective equipment

The following must be worn during all repair work:

- Work clothes
- Protective gloves
- Safety shoes
- Protective helmet.

12.7 Spare parts

⚠ WARNING

Risk of injury by incorrect spare parts!

Incorrect or defective spare parts can result in damage, malfunctions or total failure and also impair safety.

– Use only the manufacturer's original spare parts.

Procure spare parts from your dealer or directly from the manufacturer. For the address, see invoice, delivery note or the reverse of these instructions.

Spare part lists can be obtained on request.

12.8 Replacing the barrier arm

Do not grease

NOTICE

Improper lubrication of components, in particular the counter bearing or flange shaft, may lead to damage of the equipment!

– Do not grease the counter bearing and flange shaft.

Switch off power supply

1. Secure barrier danger area e.g. with barrier tape.
2. Remove the barrier housing hood.
3. Remove the barrier housing door.

WARNING!

Danger of crushing between barrier arm and barrier housing!

4. Switch off power supply. Ensure that the system is powered down. Secure against reactivation. The balancing springs in the lever system are relaxed.
5. The barrier must be open. Open barrier arm manually if required.

Remove old barrier arm

6. Remove barrier arm. For this, loosen the hexagon screw at the flange.

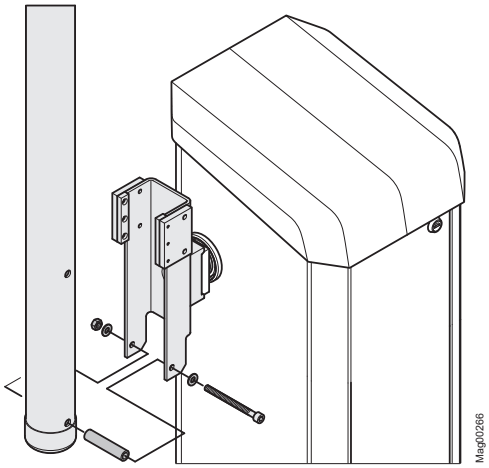

Fig. 45: Remove barrier arm

Replacing the barrier arm

7. Replacing the barrier arm.

Assemble new barrier arm

8. Attach the new barrier arm to the flange using the hexagon screw.

Align barrier arm, switch on power supply

9. Push the barrier into the top-most position. The clamping lever must be at the stop for the position "opening". If required, push straight through the upper tool bore with a tool to press the lever arm from the dead point.
→ See page 107, chapter 12.5.

10. Check vertical alignment of the barrier arm. If required, correct position of the flange and the barrier arm via the hexagon socket screws at the clamping lever.

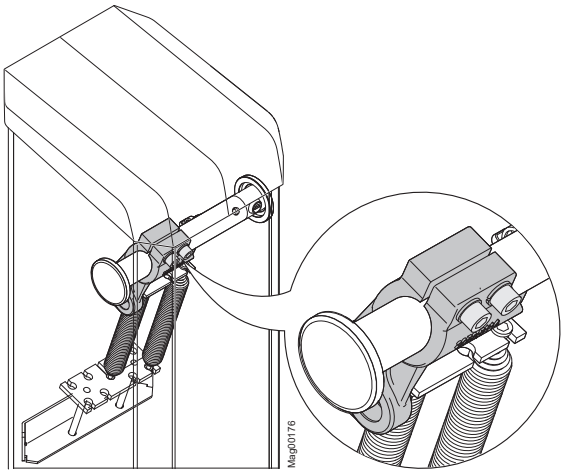

Fig. 46: Hexagon socket screws at the clamping lever

11. Switch on power supply.
12. Switch the "Service" switch on the control unit. The LED lights red. The display backlighting flashes.
13. Close the control unit with the middle right button at the control unit.
14. Check the horizontal alignment of the barrier arm with a spirit level and correct with the hexagon socket screws at the clamping lever if necessary.
15. Switch the "Service" switch on the control unit. The LED must light green.
16. Install the barrier housing door.
17. Attach and lock the barrier housing hood.

13 Decommissioning, disassembly and disposal

A barrier that is no longer usable should not be recycled as a complete unit, but disassembled into individual components and recycled according to material types. Non-recyclable materials have to be disposed of in an environmental-friendly manner.

- Decommissioning, disassembly and disposal of the barrier may only be carried out by specialised staff.
- Disassemble the barrier in reverse order from assembly.
- The barrier has to be disposed of in accordance with the respective country-specific regulations.

NOTE!

For expert information regarding disposal of electric equipment contact MAGNETIC or competent electricians.

CERTIFICATE OF COMPLIANCE

Certificate Number	20131119-E136510
Report Reference	E136510-20110610
Issue Date	2013-NOVEMBER-19
Issued to:	MAGNETIC AUTOCONTROL GMBH GRIENMATT 20 79650 SCHOPFHEIM GERMANY
This is to certify that representative samples of	DOOR, DRAPERY, GATE, LOUVER, AND WINDOW OPERATORS AND SYSTEMS See Addendum
	Have been investigated by UL in accordance with the Standard(s) indicated on this Certificate.
Standard(s) for Safety:	UL 325, Door, Drapery, Gate, Louver, and Window Operators and Systems C22.2 No. 247, Operators and Systems of Doors, Gates, Draperies, and Louvres
Additional Information:	See the UL Online Certifications Directory at www.ul.com/database for additional information

Only those products bearing the UL Listing Mark for the US and Canada should be considered as being covered by UL's Listing and Follow-Up Service meeting the appropriate requirements for US and Canada.
The UL Listing Mark for the US and Canada generally includes: the UL in a circle symbol with “C” and “US” identifiers: c UL us the word “LISTED”; a control number (may be alphanumeric) assigned by UL; and the product category name (product identifier) as indicated in the appropriate UL Directory.

Look for the UL Listing Mark on the product.

William R. Carney

William R. Carney, Director, North American Certification Programs

UL LLC

Any information and documentation involving UL Mark services are provided on behalf of UL LLC (UL) or any authorized licensee of UL. For questions, please contact a local UL Customer Service Representative at www.ul.com/contactus

CERTIFICATE OF COMPLIANCE

Certificate Number	20131119-E136510
Report Reference	E136510-20110610
Issue Date	2013-NOVEMBER-19

This is to certify that representative samples of the product as specified on this certificate were tested according to the current UL requirements.

Vehicular Barrier Gate Operators, Series:

ACCESS, ACCESS PRO and ACCESS SEL, may be followed by -X, followed by X, L or R, followed by C, followed by five digits.

PARKING, PARKING PRO and PARKING SEL, may be followed by -X, followed by X, L or R, followed by C, followed by five digits.

TOLL and TOLL PRO, may be followed by -X, followed by X, L or R, followed by C, followed by five digits.

INTERMODAL PRO, followed by five digits.

Note: X serves as placeholder for additional features.
Note: Alternate Model Designations are available, see Report for details.

William R. Carney

William R. Carney, Director, North American Certification Programs

UL LLC

Any information and documentation involving UL Mark services are provided on behalf of UL LLC (UL) or any authorized licensee of UL. For questions, please contact a local UL Customer Service Representative at www.ul.com/contactus

TCB **GRANT OF EQUIPMENT AUTHORIZATION** **TCB**

Certification

Issued Under the Authority of the

Federal Communications Commission

By:

EMCC Dr. Rasek
Moggast
D-91320 Ebermannstadt,
Germany

Date of Grant: 10/08/2003

Application Dated: 10/08/2003

SMD-Funksteuerungs GmbH
Hans-Boeckler-Strasse 5
Rodgau, 63110
Germany

Attention: Ulf Nordlander , Managing Director

NOT TRANSFERABLE

EQUIPMENT AUTHORIZATION is hereby issued to the named GRANTEE, and is VALID ONLY for the equipment identified hereon for use under the Commission's Rules and Regulations listed below.

FCC IDENTIFIER: QV2-SMD-53200RX
Name of Grantee: SMD-Funksteuerungs GmbH
Equipment Class: **Communications Receiver used w/Pt 15 Transmitter**
Notes: **Radio Receiver Module 433 MHz AM**

Grant Notes	FCC Rule Parts	Frequency Range (MHZ)	Output Watts	Frequency Tolerance	Emission Designator
CE	15B	433.92 - 433.92			

CE: This device has shown compliance with the conducted emissions limits in 15.107, 15.207, or 18.307 adopted under FCC 02-157 (ET Docket 98-80). The device may be marketed after July 11, 2005, and is not affected by the 15.37(j) or 18.123 transition provisions.

16 Appendix

16.1 Wiring diagrams

Following wiring diagrams apply to standard barriers.
Observe the customer specific wire diagrams for customer specific barriers if applicable.

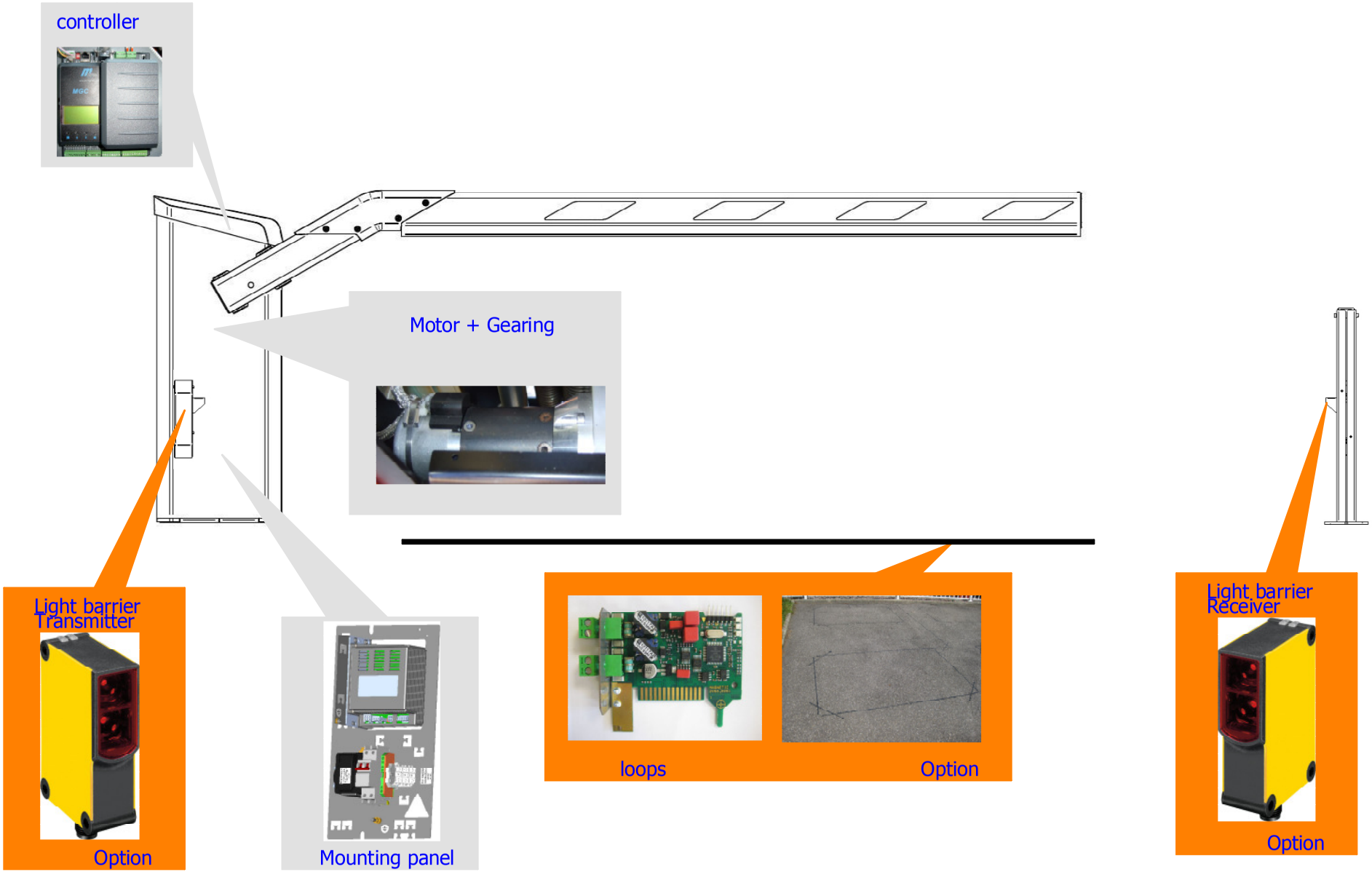

Version	Date	Modification project	Name	
06	26.02.13	5K13503	gp	22.02.2013
05	29.10.12	5K12538	gp	gp
04	13.08.12	5K12530	gp	
			00 5K11502	

MHTM
MicroDrive (UL) USA - Standard

5526,0012

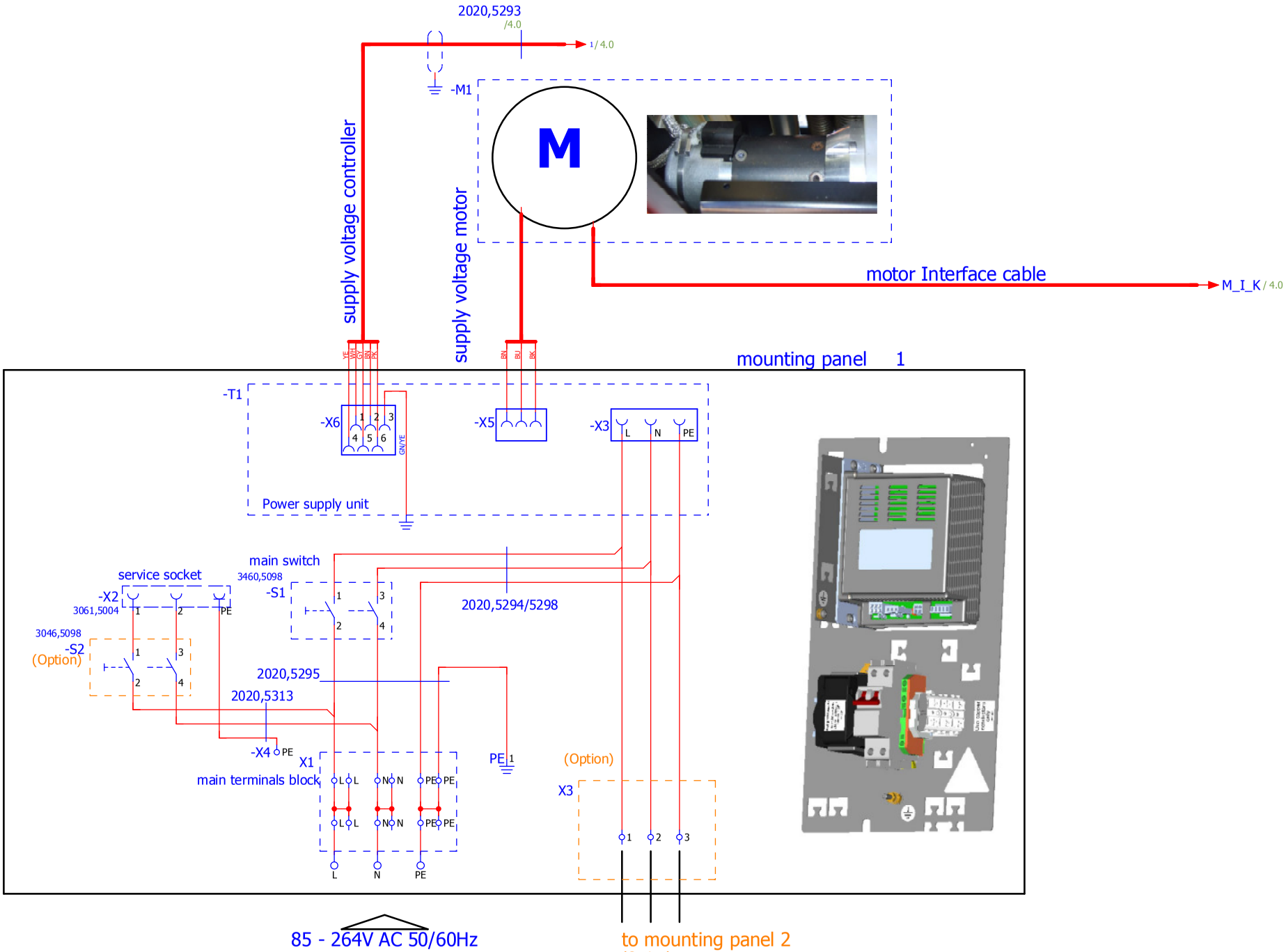

06	26.02.13	5K13503	gp	22.02.2013
05	29.10.12	5K12538	gp	gp
04	13.08.12	5K12530	gp	
Version	Date	Modification project	Name	00 5K11502

MHTM
MicroDrive (UL) USA - Standard

main connection
Power supply unit

5526,0012

Page 3
of 5

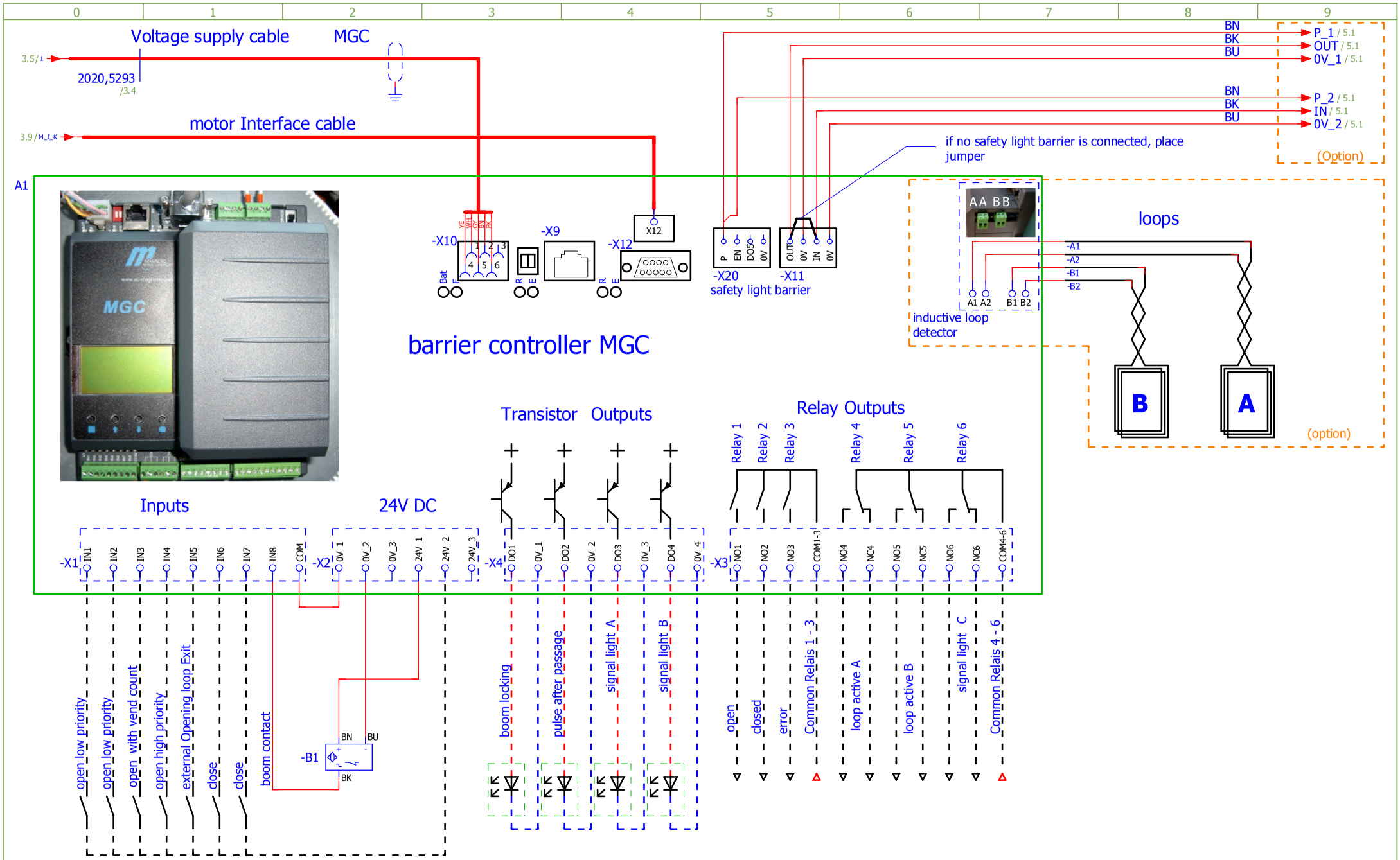

Version	Date	Modification project	Name	00 5K11502
06	26.02.13	5K13503	gp	22.02.2013
05	29.10.12	5K12538	gp	gp
04	13.08.12	5K12530	gp	

MHTM
MicroDrive (UL) USA - Standard

barrier controller MGC
input/output

5526,0012

Page 4 of 5

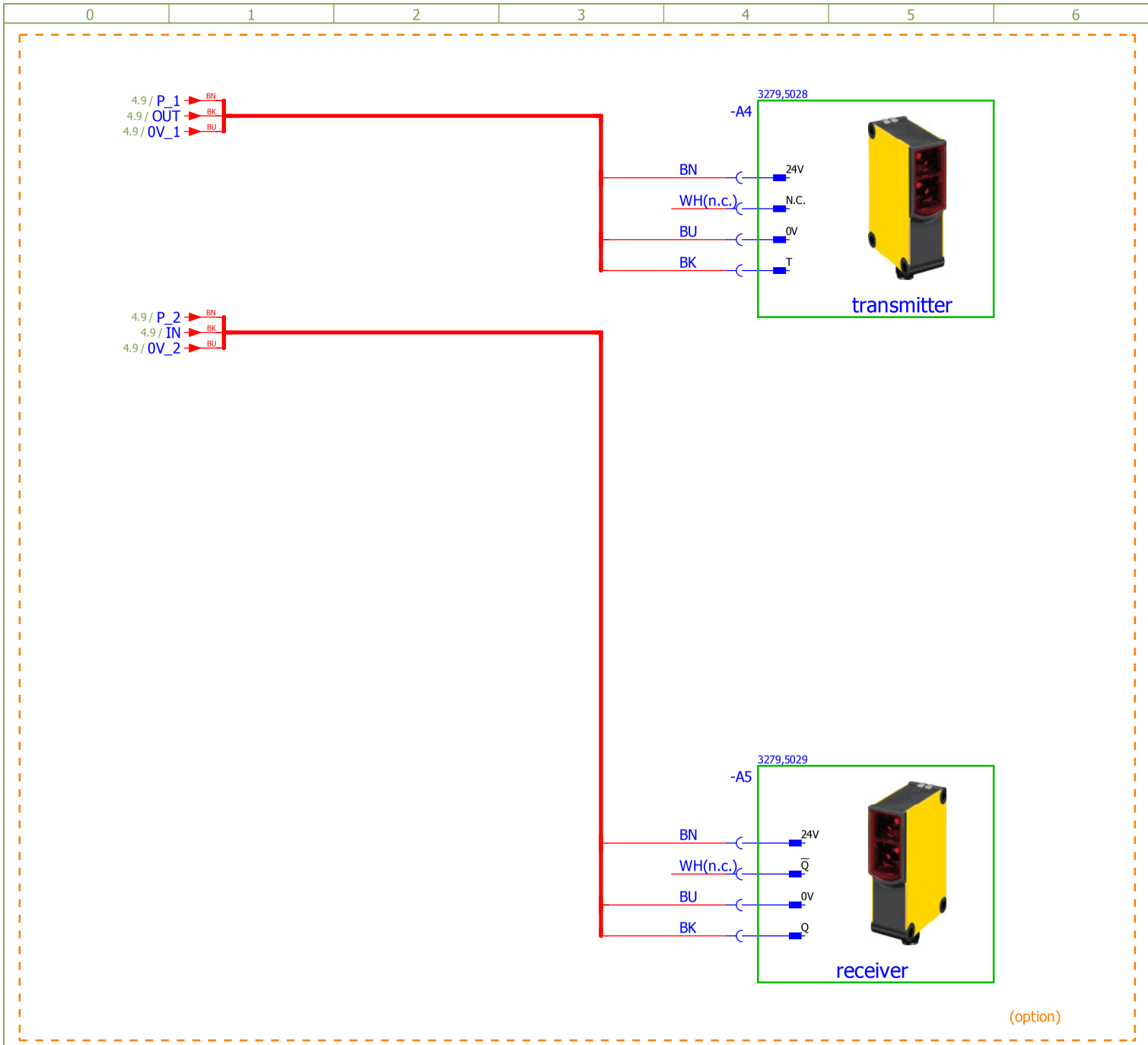

Version	Date	Modification project	Name	
06	26.02.13	5K13503	gp	22.02.2013
05	29.10.12	5K12538	gp	gp
04	13.08.12	5K12530	gp	
			00 5K11502	

MHTM
MicroDrive (UL) USA - Standard

safety-light barriers Option
LS01

5526,0012

Page 5
of 5

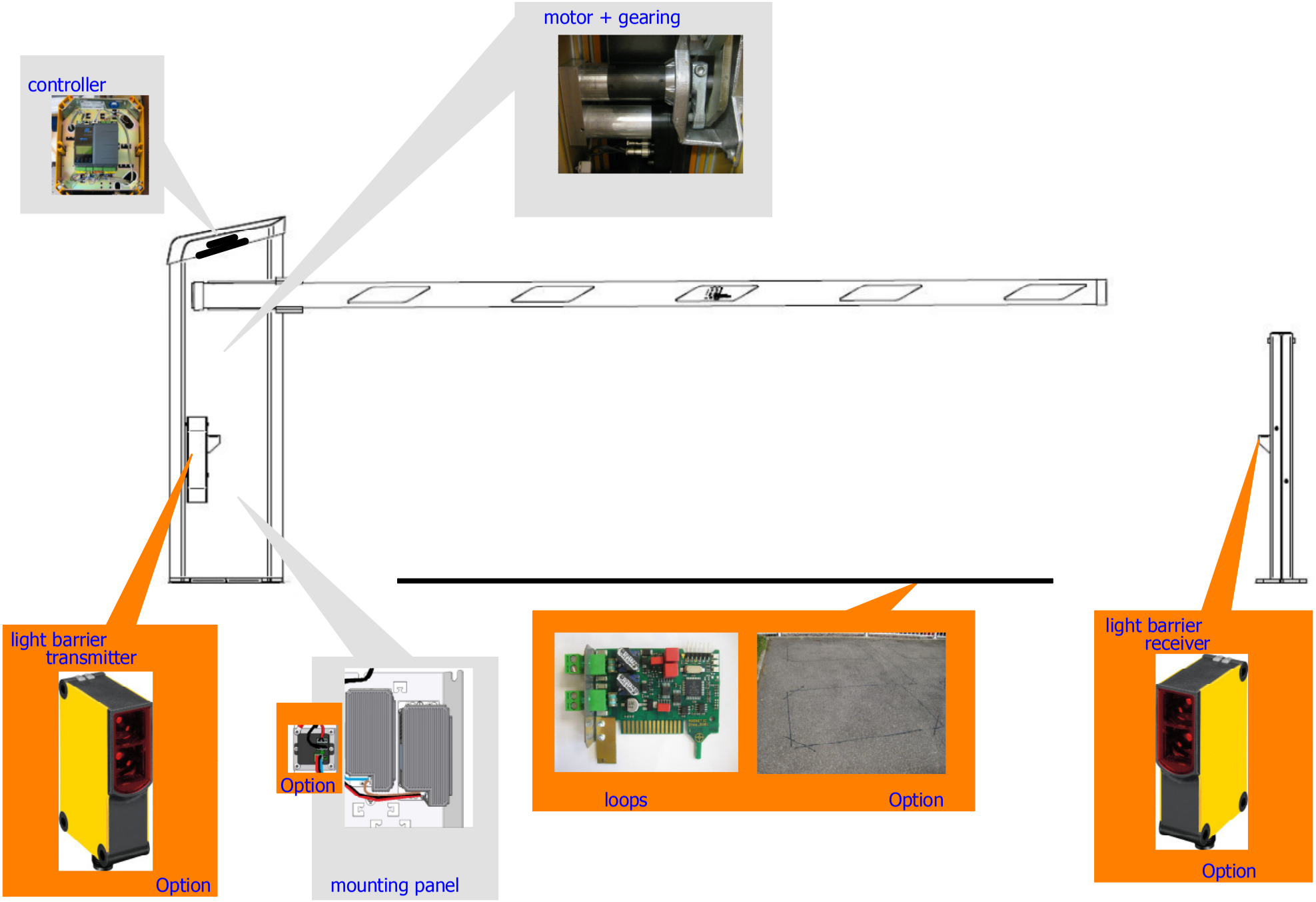

				18.07.2012
05	10.04.14	5K14511	gp	gp
04	09.01.14	5K14500	gp	
Version	Date	Modification project	Name	00 5K12527

MHTM
MicroDrive - TOLL HISPEED

MAGNETIC AUTOCONTROL™

5526,0037

Page 2 of 7

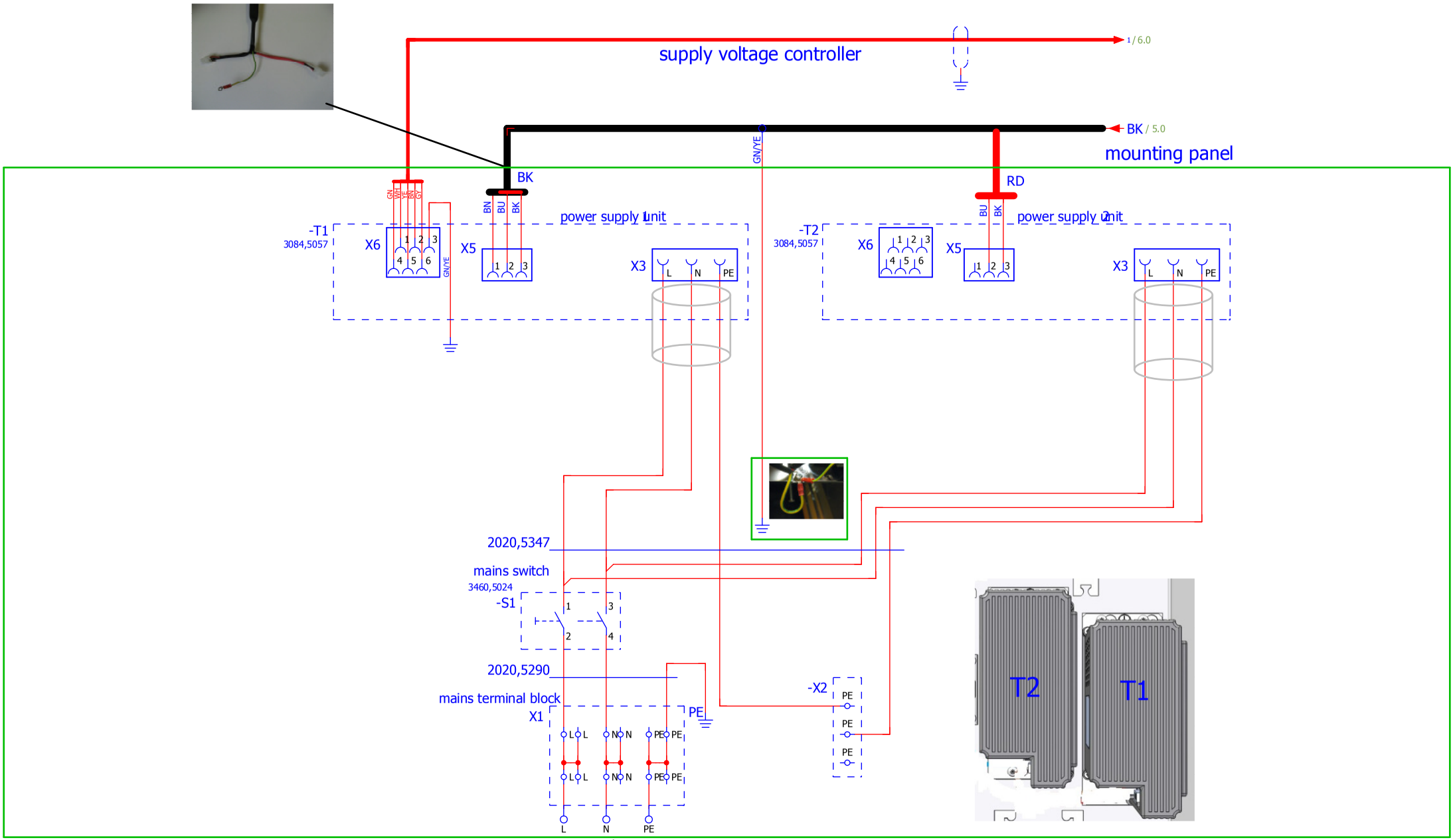

Mains unit assembly plate without external Chopper R1

				18.07.2012
05	10.04.14	5K14511	gp	gp
04	09.01.14	5K14500	gp	
Version	Date	Modification project	Name	00 5K12527

MHTM
MicroDrive - TOLL HISPEED

MAGNETIC AUTOCONTROL

5526,0037

Page 3
of 7

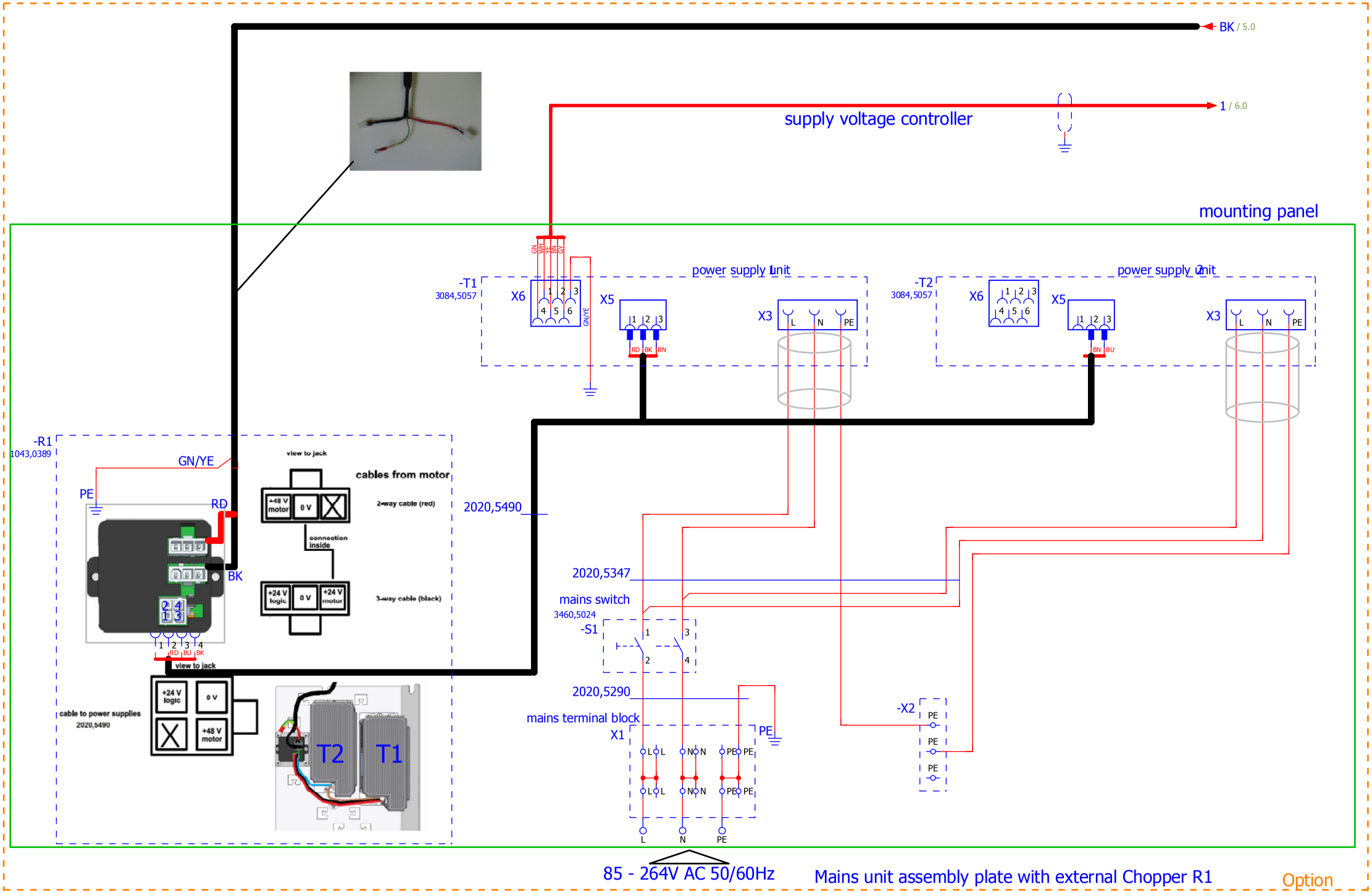

Version	Date	Modification project	Name	18.07.2012
05	10.04.14	5K14511	gp	gp
04	09.01.14	5K14500	gp	

MHTM
MicroDrive - TOLL HISPEED

MAGNETIC AUTOCONTROL

00 5K12527

5526,0037

Page 4 of 7

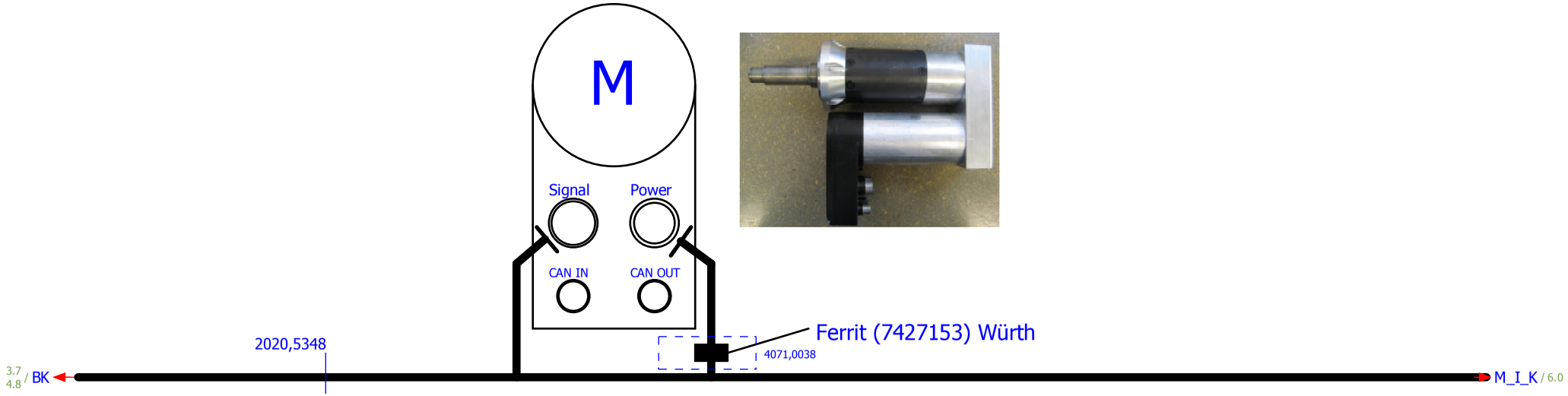

				18.07.2012	MHTM		Motor	=
05	10.04.14	5K14511	gp	gp				+
04	09.01.14	5K14500	gp		MicroDrive - TOLL HISPEED		5526,0037	Page 5
Version	Date	Modification project	Name	00 5K12527				of 7

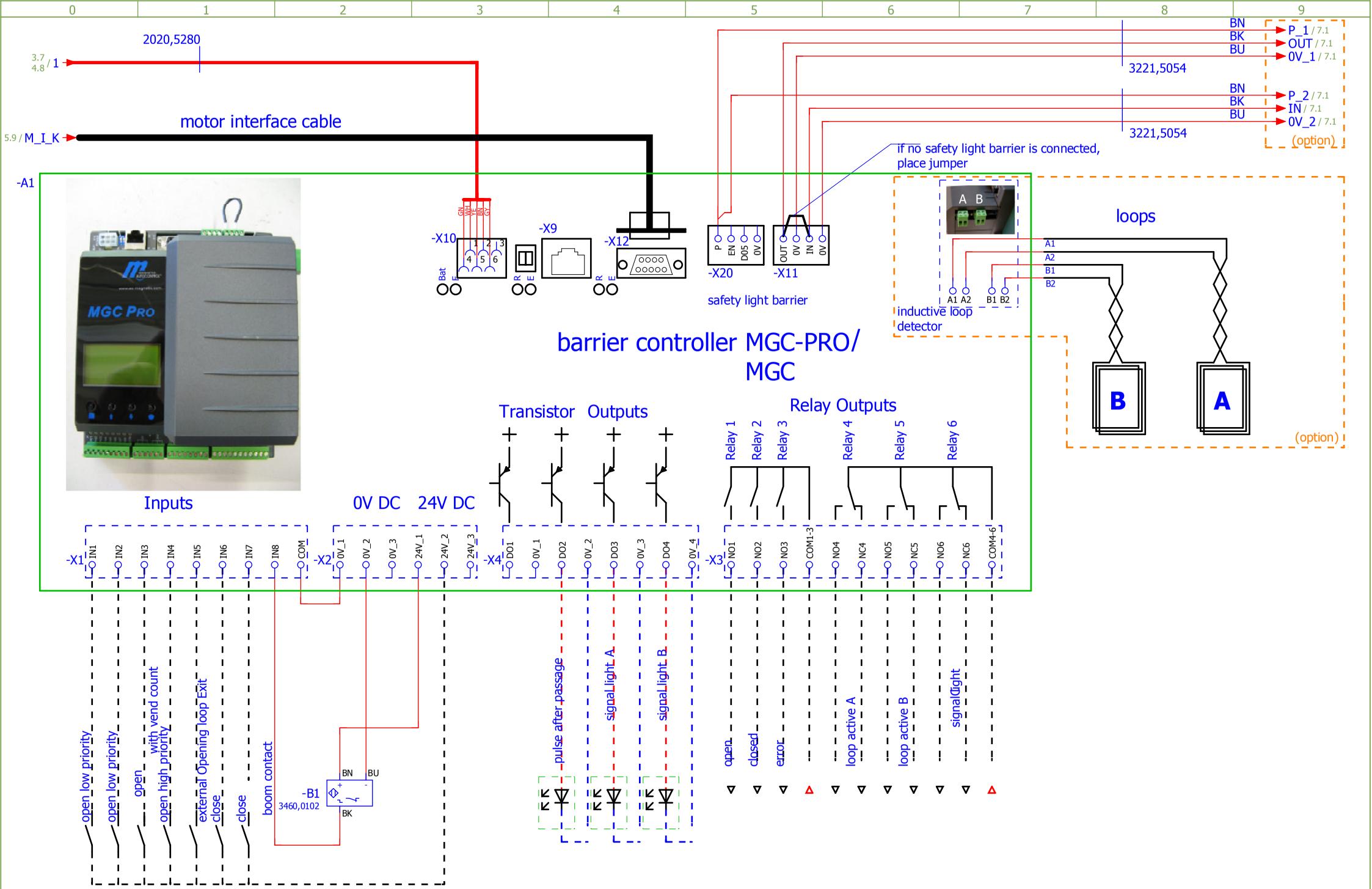

				18.07.2012
05	10.04.14	5K14511	gp	gp
04	09.01.14	5K14500	gp	
Version	Date	Modification project	Name	00 5K12527

MHTM
MicroDrive - TOLL HISPEED

MAGNETIC AUTOCONTROL

barrier controller MGC
input/output

5526,0037

Page 6
of 7

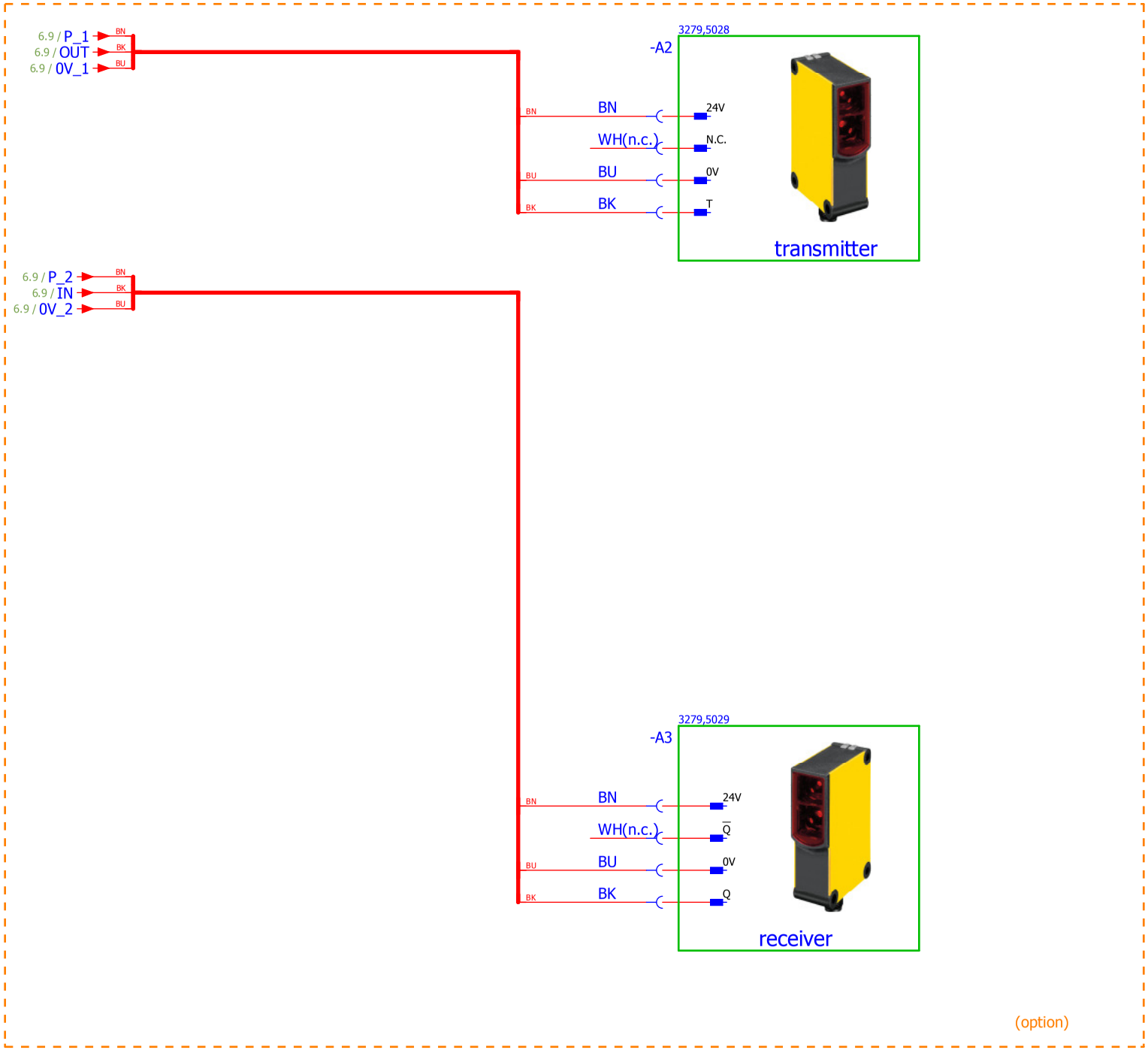

				18.07.2012
05	10.04.14	5K14511	gp	gp
04	09.01.14	5K14500	gp	
Version	Date	Modification project	Name	00 5K12527

MHTM
MicroDrive - TOLL HISPEED

safety-light barriers Option
LS01

5526,0037

Page 7
of 7

Index

A

Assemble housing 55
Assembly
  Housing 55
  Safety light barrier 57
Assembly and installation
  Required steps 42
Assembly site 44
  Light barrier posts 47

B

Balancing springs 65
  Check 64
  Equipment 67
  Setting 64
Barrier
  Manually close 88
  Manually open 88
Barrier arm 32
Barrier control unit ....See control unit
Barrier housing 32
  Open 54

C

Changes 16
Check
  Assembly 69
  Before to initial start-up 85
  Electrical connection 83
  Installation 69
Check assembly 69
Check installation 69
Cleaning 91
Commissioning 85
Connecting mains supply 73
Control unit
  Technical data 30
Control unit MGC 9
Control unit MGC Pro 9
Copyright 11
Customer service 12

D

Danger area 25
Decommissioning 112
  Temporarily 89
Design 32
Digital inputs 81
Digital outputs 82
Dimensions 28
Disassembly 112
Disposal 112

E

Electrical connection 70
Electrical specialists 17
Empty conduit
  Light barrier 47, 48
Empty conduits 44, 45
Environmental protection 13
Error 99
ERROR 99
Error messages ERROR 99
Event messages INFO 99
Events 99

F

Foundation 32, 44, 45
  Light barrier post 48
  Light barrier posts 47
Foundation plan 45, 48
Function 33

G

General 9
Grant of equipment authorization 115

H

Hazard Notes 19

I

Identification 26
Induction loops 49, 52, 53
INFO 99
Inspection
  During the first start-up 85
Instructed People 17
Intended use 14

L

Limitation of liability 11
Loop detector plug-in module
  Technical data 31

M

Maintenance 90
Maintenance schedule 92
Malfunction Table 95
Malfunctions 94
MGC 9
MGC-Pro 9
MHTM™ MicroDrive service expert 17

Index

Modifications 16
Mounting material
  Requirements 55, 56

O

Occupational safety 18, 19
Operating Instructions 9
Operating Personnel
  Requirements 17
Output relay 82

P

Parameterisation 9
Passenger car loops 37, 38
Personal protective equipment 18
Pictogram explanation 10

R

Radio plug-in module
  Technical data 31
Reinforcement 44, 45
Reset barrier 106

S

Safety 14
  Cleaning 90
  Commissioning 84
  Electrical connection 70
  Maintenance 90
  Malfunctions 94
  Operation 84
  Repair 109
  Transport 34
Safety Instructions 3
Safety light barrier 57
  Align 79
Scope of delivery 12
Service switch 88
Spare parts 110
Specialised Staff 17
Specialists
  Requirements 17
Storage 36
Switching off 87
Switching on 87

T

Technical data 28
Transport 36
Transport inspection 35
Truck loops 38
Truck/passenger car loops 39
Type code 27
Type plate 26

U

UL-Declaration 12
Unpacking 54

W

WARNING 99
Warning messages WARNING 99
Warning notes 10
Warning signs 69
Warnings 99
Warranty 12
Wiring diagrams
  Toll and Toll Pro 119
  Toll HighSpeed 127

MAGNETIC Automation Corporation
3160 Murrell Road
Rockledge, Florida, 32955
USA

Tel.: +1 321 635 8585
Fax.: +1 321 635 9449
E-Mail: info@ac-magnetic.com
Internet: www.ac-magnetic.com

Address sales partner:

F05530690